Eksamen 4. desember 2010. Problems 1-3

Oppgave / Oppgåve 1: Destillasjon (30%)

To komponenter (A og B) skal separeres i en destillasjonskolonne slik at topp-produktet (D) er 95 mol-% A og bunnproduktet (B) er 5 mol-% A. Kolonnen har to føder:

Øvre føde: F_1 = 50 mol/s, innholder 50 mol-% A og er mettet væske
Nedre føde: F_2 = 50 mol/s, innholder 25 mol-% A og er mettet damp

Refluksforholdet skal være R = L/D = 3.

Likevektsdata

x_A	0.05	0.10	0.20	0.30	0.40	0.50	0.60	0.70	0.80	0.90
y_A	0.12	0.25	0.42	0.56	0.67	0.75	0.83	0.88	0.94	0.97

Angi alle ytterligere antagelser du gjør.

(a) Beregn alle strømmene i kolonnen (D, B, L, LM, etc. [mol/s].), se figuren

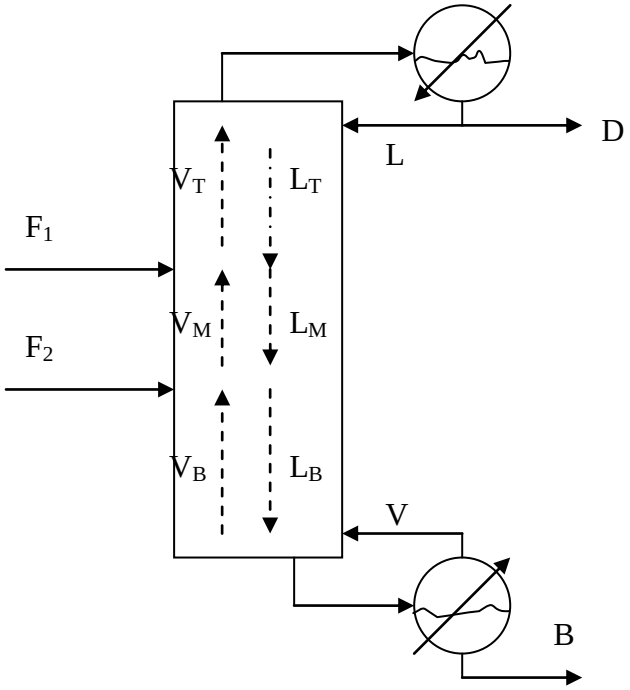

(b) Bruk massebalanser til å utlede driftslinjen for de tre delene av kolonnen.

(c) Bestem nødvendig antall teoretiske trinn med den grafiske McCabe-Thiele metoden. F_1 og F_2 skal plasseres optimalt, dvs. slik at kolonnen får færrest mulig trinn

(d) Bestem minimum refluks (Lmin) og diskuter valg av refluks.

Oppgave / Oppgåve 2: Absorpsjon (20%)

En pakket absorpsjonskolonne tilføres 2.13 kg/s av en gassstrøm med 98 mol-% luft og 2 mol-% av en uønsket komponent A. 99.9% av komponent A skal fjernes ved absorpsjon i vann (som tilføres som rent vann i motstrøm). Gass- og væskebelastningen skal være henholdsvis 1.3 og 2.0 kg/(s,m2 tårntversnitt). Kolonnen opererer ved ca. 300K og 1 bar.
.
Data:
Molvekter [kg/kmol] er 29 (luft), 18 (vann) og 70 (A).
Henry's lov: $p_A = H\, x_A$ der H = 0.2 bar.
Volumetrisk masseoverføringskoeffisient: $K_y a$ [mol A/s,m3]= 39.2 $G_L^{0.5}$ der G_L[kg/(s,m2)] er væskebelastningen.

Angi ytterligere antagelser du gjør.

(a) Beregn tårntverrsnitt S [m2], gasshastigheten v [m/s] og væskeføden L [mol/s].

(b) Det er gitt at masseoverføringen i kolonnen kan beregnes fra uttrykket

$$N_A = (K_y\, a)\, S\, z\, (y-y^*)_{lm} \qquad \text{[mol A/s]}$$

Der "lm" angir logaritmisk midlere verdi, $\Delta y_{lm} = (\Delta y_1 - \Delta y_2) / \ln(\Delta y_1/\Delta y_2)$. Definer symbolene i uttrykket, og forklar kort hvordan det kan utledes og hvilke antagelser som må gjøres.

(c) Beregn nødvendig pakningshøyde.

(d) Ekstra poeng: Beregn minimum væskemengde Lmin og kommenter den valgte verdien.

Oppgave / Oppgåve 3. Regulering av reaktor (15%)
Før tilsats til en reaktor skal reaktant A fortynnes med vann til en nøyaktig konsentrasjon. Fortynningen medfører en kraftig varmeutvikling. Prosessen som skal brukes er vist i figuren. Konsentrasjonen grovjusteres i et blandekar med kjøling. Forholdene gjør det vanskelig å installere en konsentrasjonsmåler her. Blandingen avkjøles videre i en varmeveksler og konsentrasjonen finjusteres før reaktoren. Strøm-mengden av reaktant A kan måles men settes for øvrig konstant av operatøren. Forholdet B/A bør holds konstant. Sett opp et forslag til reguleringsopplegg, gjerne basert på klassifisering av variable og prosessmatrise.

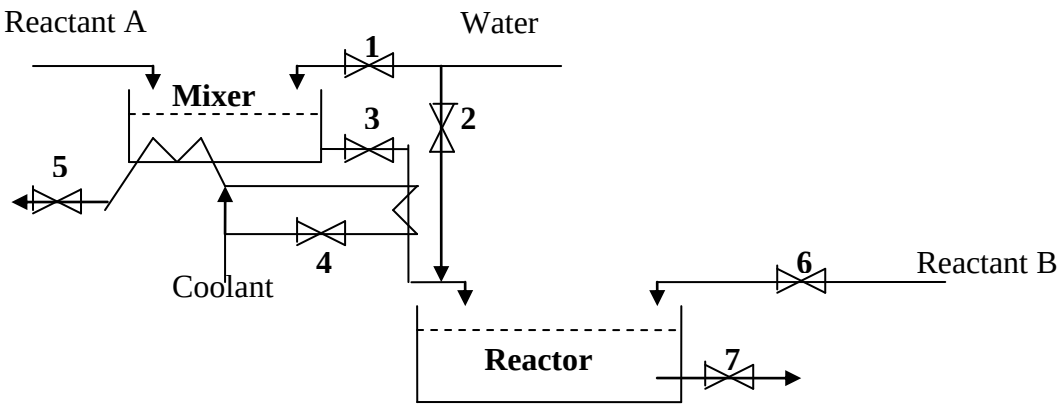
Reactant A
Water
1
Mixer
3
2
5
4
Coolant
6
Reactant B
Reactor
7

ENGLISH

Problem 1: Distillation (30%)

Two components (A and B) are separated in a distillation column such that the top product (D) is 95 mol-% A and the bottom product (B) is 5 mol-% A. The column has two feeds:

Upper feed: F_1 = 50 mol/s, contains 50 mol-% A and is saturated liquid.
Lower feed: F_2 = 50 mol/s, contains 25 mol-% A and is saturated vapour.

The reflux ratio R = L/D = 3.

Equilibrium data

x_A	0.05	0.10	0.20	0.30	0.40	0.50	0.60	0.70	0.80	0.90
y_A	0.12	0.25	0.42	0.56	0.67	0.75	0.83	0.88	0.94	0.97

State any additional assumptions that you make.

(a) Find all the flows in the column (D, B, L, LM, etc. [mol/s].), see the figure.

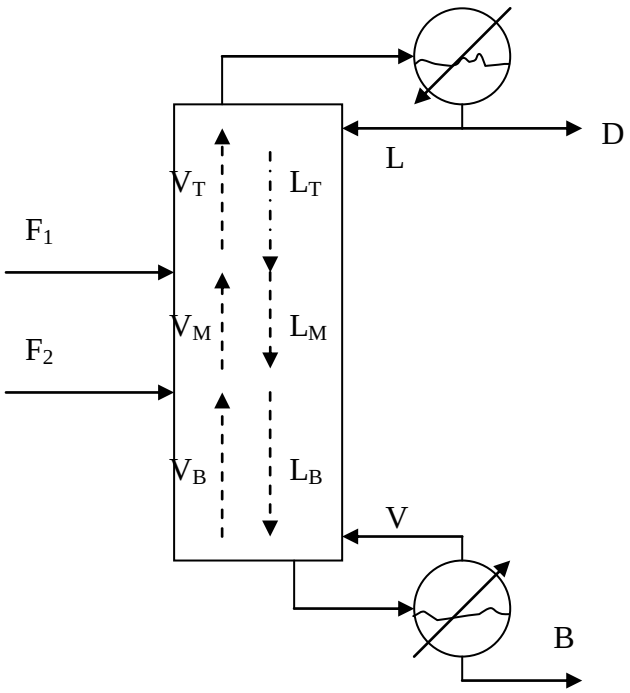

(b) Use mass valances to derive the operating lines for the three parts of the column.

(c) Find the required number of theoretical stages using the graphical McCabe-Thiele method. The feeds F_1 are F_2 should be optimally located, that is, such that the number of stages in minimized.

(d) Find the minimum reflux (Lmin) and discuss the choice of the reflux. .

Problem 2: Absorption (20%)

A packed absorption column is fed 2.13 kg/s of a gas with 98 mol-% air og 2 mol-% of an undesirable component A. 99.9% of component A is to be removed by absorption in water (which is fed countercurrently as pure water. The gas and liquid loads are 1.3 og 2.0 kg/(s,m2 column cross-sectional area), respectively. The column operates at about 300K and1 bar.
.
Data:
Mole weight [kg/kmol] are 29 (air), 18 (water) og 70 (A).
Henry's law: $p_A = H\, x_A$ where H = 0.2 bar.
Volumetric mass transfer coeffisient: $K_y a$ [mol A/s,m3]= 39.2 $G_L^{0.5}$ where G_L[kg/(s,m2)] is the liquid load.

State any additional assumptions that you make.

(a) Find the column cross-sectional area S [m2], gas velocity v [m/s] and the liquid feed L [mol/s].

(b) The overall mass transfer in the column can be calculated using the formula

$$N_A = (K_y\, a)\, S\, z\, (y-y^*)_{lm} \qquad \text{[mol A/s]}$$

where "lm" denotes the log mean value, $\Delta y_{lm} = (\Delta y_1 - \Delta y_2) / \ln(\Delta y_1/\Delta y_2)$. Define the symbols in the fomula, explain briefly how it can be derived and state which assumptions that are needed.

(c) Find the required packing height.

(d) Extra points: Find the minimum liquid flow and comment on the chosen value.

Problem 3. Control of reactor (15%)

Before feeding to the reactor, reactant A needs to be diluted with water to a specified concentration. The mixing with water releases a lot of heat. The process flowheet is shown in the figure. The main dilution is done in the mixing tank which is also cooled. The conditions in the mixing tank make it difficult to install a concentration sensor here. The mixture is further cooled in a heat exchanger before the concentration is "fine tuned" before enetering the reactor. The flow of reactant A is measured, but it set a constant rate by the operator. Suggest a control structure, preferably based on classification of variables and a process matrix.

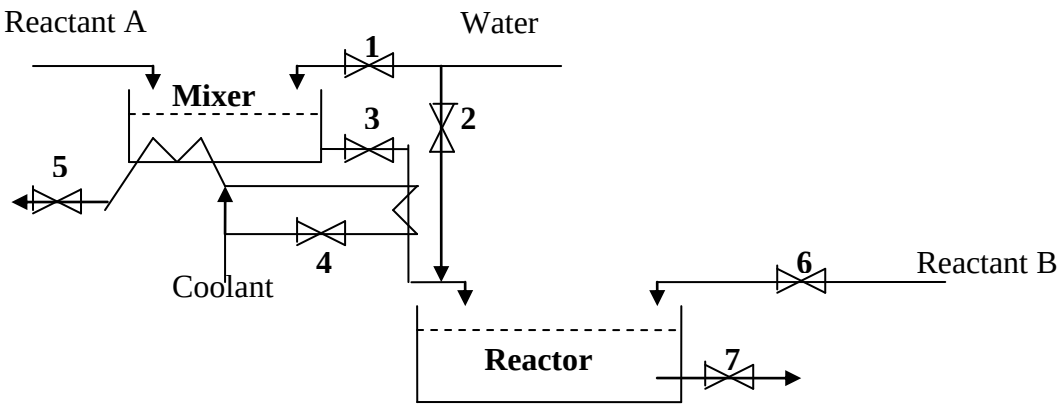
Reactant A
Water
1
Mixer
3
2
5
4
Coolant
6
Reactant B
Reactor
7

SOLUTION

PROBLEM 1 Solution

(a) Balances over entire column

F1 + F2 = B + D
xF1 F1 + xF2 F2 = xB B + xD D

100=B+D
0.5*50+0.25*50 = B*0.05 + D*0.95

Get D=36.11 mol/s, B=63.89 mol/s

Given L/D=3, qF1=1 (liquid) and qF2 =0 (vapour) gives
L=LT = 108.33
LM=LB=LT+qF1*F1=158.33
VM=VT = L+D = 144.44
VB=V=LB-B=94.44

(b) Operating lines = Component material balance through section

Top:
y VT = x LT + D xD -> y = LT/VT x + DxD/VT = 0.75 x + 0.238

Middle :
y VM = x LM + D xD – F1 xF1-> y = 1.096 x + 0.064

Bottom :
y VB = x LB - BxB -> y = 1.677 x - 0.034

(c) Draw McThiele diagram.

- Draw upper feed line (liquid): Vertical line through (0.5, 0.5)
- Draw lower feed line (vapor): Horizontal line through (0.25, 0.25)
- Draw upper operating line through (0.95,0.95) and slope L/V=0.75
- Draw lower operating line through (0.05, 0.05) and slope L/V=1.677
- Draw middle operating line: Goes through crossing of lower operating line & lower feed line and upper operating line & upper feed line. Check: should go through (0, 0.064) and have slope L/V=1.096.

I started staircase from the bottom, but we could have started from the top instead.

From McCabe Thiele diagram, we need 7.8 theoretical stages.

Since reboiler gives 1 theor. stages we need:
reboiler (contributes 1 theor. stage)
6.8 theoretical trays inside column
Total condenser (contributes 0 stage)

Optimal feed location (counting stages from bottom):
Reboiler = stage 1
Feed 1: Above stage 2 (tray 1)
Feed 2: Above stage 5 (tray 4)

If we count from top, then feed 1 is below stage 3 and feed 2 is below stage 6, There are then 1.8 stages and finally the reboiler (1 stage).

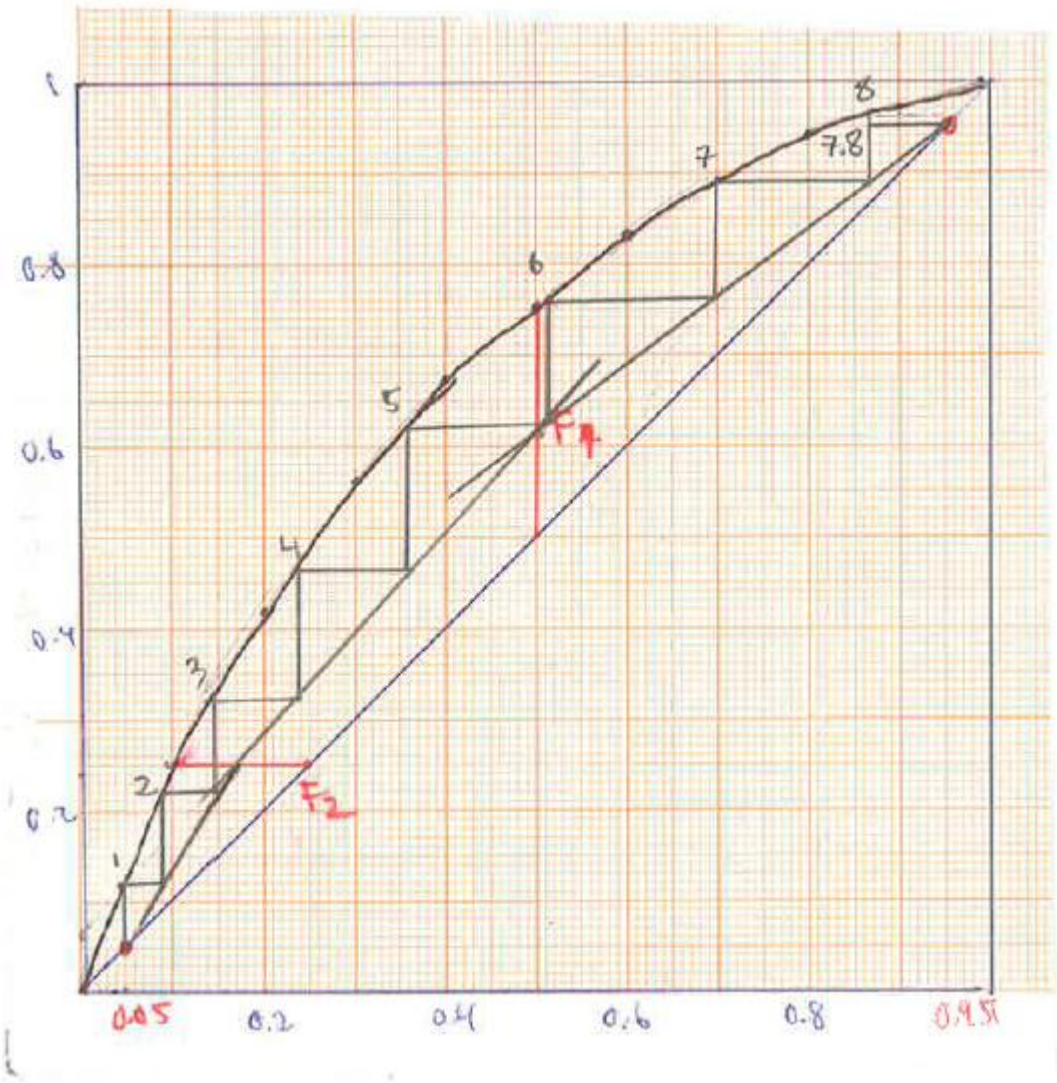

(d) Minimum reflux. Have two feeds, so must consider possibility of pinch both places.

Upper feed: Upper feed line crosses eq. curve at (0.50, 0.75). Consider line through this point and (0.95, 0.95). Get Slope=(Lmin/Vmin)_T =(0.95-0.75)/(0.95-0.5)=0.44, or (Lmin/(Lmin+D)=0.44 or Lmin=28.37 mol/s (at top).

Lower feed: Lower feed line crosses eq. curve at (0.10, 0.25). Consider line through this point and (0.05, 0.05). Get Slope=(Lmin/Vmin)_B =(0.25-0.05)/(0.10-0.05)=4, or (Lmin/(Lmin-B)_B=4 or LBmin/B=1.33 or LBmin = 84.97 mol/s, which corresponds top the following reflux flow at the top: LTmin=Lbmin-F1 = 34.97 mol/s.

So it is the bottom feed that gives the minimum reflux of Lmin=34.97 mol/s.

Discussion of choice of reflux L.
The actual reflux is L = 108.33 mol/s which is 3.1 Lmin, so this is very high-. Normally, we select L/Lmin about 1.2 to get a good tradeoff between capital costs (N) and energy (V).

Comment: Could alternative look at V. In bottom, Vmin = LBmin – B = 84.97 – 63.89 = 21.08 mol/s. Actual boilup is V = 94.44 mol/s =
+4.48 Vmin, which is way too large.

Problem 2
Solution:

(a) Column cross section area: S = 2.13 kg/s /1.3 kg/s,m2 = 1.64 m2.

The average mole weight is: 0.98*29+0.02*70 = 29.8 kg/kmol

Molar Gas feed rate: V = 2.13 kg/s / 29.8 kg/kmol = 0.07 kmol/s = 71.5 mol/s
(of this we have 71.5 * 0.98 = 70.07 mol air/s and NA=71.5*0.02 = 1.43 mol A/s)

Assume ideal gas. Then the molar volume is V = RT/p = 8.31*300/1.e5=0.0249 m3/mol.

Volumetric gas feed rate: V= 71.5 mol/s * 0.0249 m3/mol = 1.78 m3/s

Gas velocity, v = V[m3/s]/S = 1.78 m3/s / 1.64 m2 = 1.09 m/s

Liquid feed: 2 kg/s,m2*1.64 m2 = 3.28 kg/s.
This is water, so molar feed: L= 3.28 kg/s / 18 kg/kmol = 0.182 kmol/s = 182 mol/s

(b) S [m2] – column cross sectional area
y - gas phase mole fraction of component A
y* - (imaginary) gas mole fraction in equilibrium with liquid
1 – top of column
2 – btm of column

Derivation:
Assumptions: 1) Constant molar flows (straight equilibrium line).
2) Linear equilibrium curve (y = mx+b); Henry's law satisfies this.
Comment: These assumptions hold well for dilute mixtures as given in this problem.

(c)
Assumptions: Assume inert air (no condensation) and inert water (no evaporation of water).

Equilibrium for component A: y = mx where from Henry's law m = H/p = 0.2 bar/ 1 bar = 0.2

Mass transfer coefficient for component A: $K_y a = 39.2\ GL^{0.5} = 39.2*2^{0.5} = 55$ mol A /s, m3

Mole fraction of A in gas feed:

y2 = 0.02

Amount of A in gas out = 1.43 mol/s *(1- 0.999) = 0.00143 mol/s

Mole fraction of A in gas leaving (assume air is inert)

y1 = 0.00143/(70.07+0.00143) = 20.4 e-6 (ppm)

Mole fraction of A in liquid in (pure water) x1 = 0 -> y1* = 0

Amount of A in liquid out = 1.43 mol/s * 0.999 = 1.429 mol/s

Mole fraction of A in liquid out, x2 = 1.429 / (1.429+182)= 0.0078 ->

y2*= 0.2 x2 = 0.00156

Log mean mole fraction difference. dy1 = y1 – y1* = 20.4 e-6, dy2 = y2-y2*= 0.0027

dylm = (dy1-dy2)/ln(dy1/dy2)) = 0.00081

Overall mass transfer of A;

$N_A = (K_y a) S z (y-y^*)_{lm}$

1.43 mol/s = 55 * 1.64 * z * 0.0027 -> z = 5.87 m

(d) Extra points for this: Minimum liquid load (corresponding to an infinite column height) occurs when we have equilibrium in the bottom of the column (that s, the equilibrium and operating lines cross), that is, when y2*=0.02, or x2=0.02/02=0.10. Here, x2 = 1.429/(Lmin+1.429), so Lmin = 12.86 mol/s (water).

Thus, we use 186/12.86 = 14.5 times the minimum, which is not a problem since water is so cheap and higher rates is good because it improves the mass transfer rate (see the given formula, where $K_y a$ increases by $G_L^{0.5}$).

Problem 3. Reactor control. Solution

There are 7 MVs (q1, .. , q7) as shown in the flowsheet.

We first need to decide what to control (CV).

1. Level mixer: Lmix
2. Level reactor: Lrx
3. Temperature mixer: Tmix
4. Temperature Reactor: Trx
5. Concentration in feed to reactor: cA
6. Ratio A/B (given that it should be constant)

In addition, we would like to control the concentration of A in the mixing tank, but it is given that it is difficult to measure. This probably means that we should set q1 (main water dilutant in ratio to the flow of reactant A

There is then one “extra” MV degrees of freedom. This is related to the e flow of reactant B should be set in ratio to the feed of A.

Proposed control structure

Ratio control: q1/qA constant (the ratio setpoint should be adjusted so that the flow q2 has a reasonable value: it must at least be positive)

Ratio control: q6/qA constant (the ratio setpoint should be adjusted so that there is no excess of A or B in the product stream)

Feedback loops

LC: Lmix – q3
LC: Lrx – q7
TC: Tmix – q5
TC: Trx – q4
CC: cA – q2

OPPGAVE 2 EKSAMEN LØSNING

$$X_{om} = \frac{X_f\left[1+(\alpha^* - 1)\frac{P_l}{P_n}(1-X_f)\right]}{\alpha(1-X_f)+X_f}$$

$$\alpha_1^* = \frac{P_{CO_2}}{P_{N_2}} = \frac{6\cdot 10^{-7}}{3\cdot 10^{-9}} = \underline{200} \qquad \frac{P_l}{P_n} = \frac{0.1}{4} \quad 1)$$

$$\alpha_{2,3} = \frac{P_{CO_2}}{P_{CH_4}} = \frac{6\cdot 10^{-7}}{1.2\cdot 10^{-8}} = \underline{50} \qquad \frac{P_l}{P_n} = \frac{1}{7} \quad 2)$$

$$\frac{P_l}{P_n} = \frac{1}{70} \quad 3)$$

a) Flue gas:

$$\underline{\underline{X_{om}}} = \frac{0{,}13\left[1+(200-1)\frac{0.1}{4}(1-0{,}13)\right]}{200(1-0{,}13)+0{,}13}$$

$$= 0{,}69267 / 174{,}13 = 3{,}98\cdot 10^{-3} = \underline{\underline{0{,}004}}$$

Biogas:

$$\underline{\underline{X_{om}}} = \frac{0.40\left[1+(\cancel{200}\,50-1)\frac{1}{7}(1-0.4)\right]}{50(1-0{,}40)+0.4}$$

$$= 2.08 / 30.4 = 6.84\cdot 10^{-2} = \underline{\underline{0{,}07}}$$

Naturgas

$$\underline{\underline{X_{om}}} = \frac{0{,}10\left[1+(50-1)\frac{1}{70}(1-0.1)\right]}{50(1-0.10)+0.1}$$

$$= 0{,}163 / 45.1 = 3.6\cdot 10^{-3} = \underline{\underline{0{,}004}}$$

b)

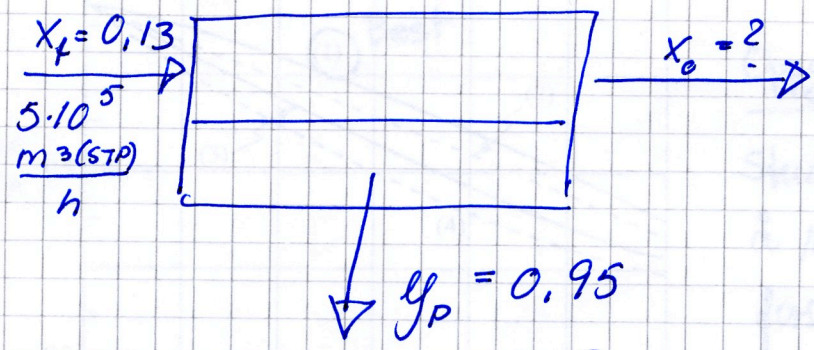

Permeatkutt: $\Theta = \frac{q_p}{q_f} = 0{,}1 \Rightarrow \underline{q_p = 0{,}5 \cdot 10^5}$

Sjekker hva x_o blir $\left(q_r = 4{,}5 \cdot 10^5 \right)$

$\Rightarrow$ Massebalanser:

$$0{,}13 \cdot 5 \cdot 10^5 = 0{,}95 \cdot 5 \cdot 10^4 + 4{,}5 \cdot 10^5 \cdot x_{o,r}$$

$$\Rightarrow \underline{\underline{x_{o,r} = 0{,}04}} \quad \checkmark \text{ ok } (> x_{om})$$

Hva er innfangingsgraden?

$$5 \cdot 0{,}13 = \frac{\left(\underbrace{0{,}65 \cdot 10^5}_{CO_2 \text{ inn}} - \underbrace{0{,}18 \cdot 10^5}_{CO_2 \text{ i retentat}} \right)}{0{,}65 \cdot 10^5} = 4{,}5 \cdot 0{,}04$$

$$= 0{,}723 \equiv \underline{\underline{72\,\%}}$$

(som er for lavt...)

c)

$$\underline{\underline{A}} = \frac{\Theta q_f \cdot y_p}{\left(\frac{P}{\ell}\right)\left(p_h \cdot x_o - p_l y_p\right)} = \frac{0{,}1 \cdot 10^4 \cdot y_p}{\frac{6 \cdot 10^{-7}}{2 \cdot 10^{-6}}\left(70 \cdot x_o - 1 y_p\right)}$$

$$\underline{y_p} = \frac{0{,}1 - 0{,}025(1-0{,}1)}{0{,}1} = \underline{\underline{0{,}775}}$$

$$= \frac{10^3 \cdot 0{,}775}{3 \cdot 10^{-1}(70 \cdot 0{,}025 - 0{,}775)}$$

$$= \frac{0{,}775}{0{,}2925} \cdot 10^3 = \underline{\underline{2{,}65 \cdot 10^3 \, m^2}}$$

d) Se lærebokka s. 847 — 850 + Figur 13.7-6

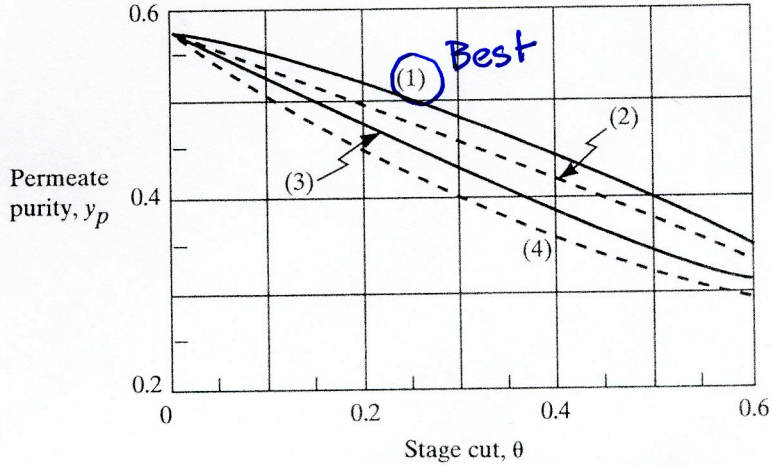

FIGURE 13.8-2. *Effect of stage cut and flow pattern on permeate purity. Operating conditions for air are as follows:* $x_f = 0.209$, $\alpha^* = 10$, $p_h/p_l = 380$ *cm Hg/76 cm Hg* $= 5$. $P'_A = 500 \times 10^{-10}$ $cm^3(STP) \cdot cm/s \cdot cm^2 \cdot cm$ *Hg.* *(1) countercurrent flow, (2) cross-flow, (3) cocurrent flow, (4) complete mixing (W5).* [Reprinted from W. P. Walawender and S. A. Stern, *Sep. Sci.*, 7, 553 (1972). By courtesy of Marcel Dekker, Inc.]

Oppg. 2d

Studenten er forventet å redegjøre for de forskjellige typer moduler, og velge hulfiber modul som har høyest pakketetthet (m^2/m^3) og er best egnet for gasseparasjon

&

I tillegg si noe om beste strømnings-mønster som er "counter-current"

13.8B Effects of Process Flow Patterns on Separation and Area

Detailed parametric studies have been done by various investigators (P4, P5, W5) for binary systems. They compared the four flow patterns of complete mixing, cross-flow, cocurrent, and countercurrent flow. In Fig. 13.8-2 (W5) the permeate concentration is shown plotted versus stage cut, θ, for a feed of air ($x_f = 0.209$ for oxygen) with $\alpha^* = 10$ and $p_h/p_l = 5$. It is shown that, as expected, the countercurrent flow pattern gives the best separation. The other patterns of cross-flow, cocurrent, and complete mixing give lower separations in descending order. Note that when the stage cut $\theta = 0$, all flow patterns are equivalent to the complete mixing model and give the same permeate composition. Also, at $\theta = 1.00$, all patterns again give the same value of $y_p = 0.209$, which is also the feed composition.

The required membrane areas for the same process conditions and air feed versus stage cut were also determined (W5). The areas for all four types of flow patterns were shown to be within about 10% of each other. The countercurrent and cross-flow flow patterns give the lowest area required.

In general, it has been concluded by many parametric studies that at the same operating conditions the countercurrent flow pattern yields the best separation and requires the lowest membrane area. The order of efficiency is as follows: countercurrent > cross-flow > cocurrent > complete mixing.

PROBLEM 4, a)

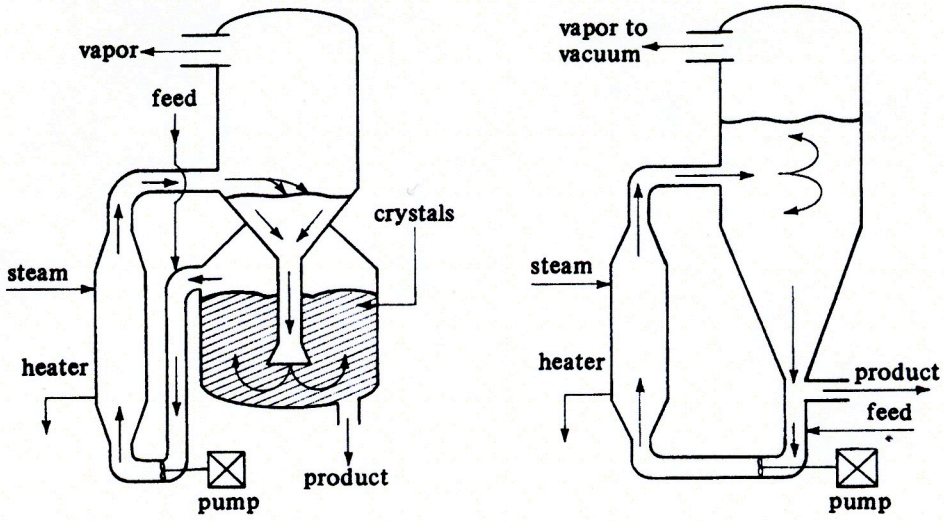

Om krystallisasjonsteori, se læreboka - pkt 12.11 og 12.12

Om utstyr (krystallisatorene over) se pkt. 12.11D i boka

a) = circulating-liquid evaporator-crystallizer

b) = circulating-magma vacuum-crystallizer

PROBLEM 4, b) See the textbook in Chapter 9.3C and 9.3D

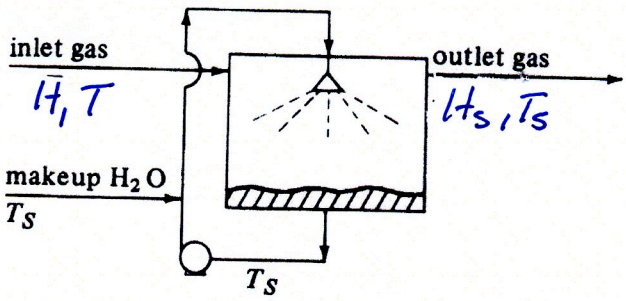

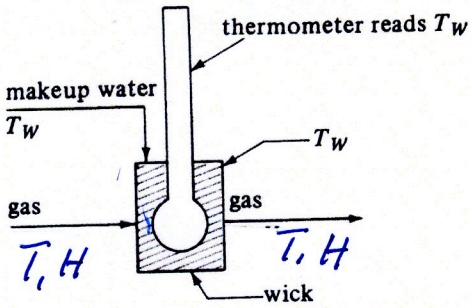

adiabatisk luft-vann metningskammer

⇒ luft i kontakt med mye vann

$$c_s(T-T_s)+H\lambda_s = c_s(T_s-T_s)+H_s\lambda_s$$

$$\frac{H-H_s}{T-T_s} = \frac{c_s}{\lambda_s}$$

Varme tapes ved fordampning fra "kluten"

$$q = M_A N_A \lambda_w A$$

⇒ temp. synker, T_w

$$\frac{H-H_w}{T-T_w} = \frac{h/M_B \cdot k_y}{\lambda_w}$$

adiabatic saturation lines can be used for wet bulb temp.