Control and operation of dividing-wall columns with vapor split manipulation

PhD Defense Presentation

Deeptanshu Dwivedi

Jan 18th, 2013

Trondheim

Outline

- Introduction & Scope
- Chapter 3: Control structure selection for three-product Petlyuk (dividing-wall) column
- Chapter 4: Steady state and dynamic operation of four-product dividing-wall (Kaibel) columns
- Chapter 5: Active vapor split control for dividing-wall columns
- Chapter 6: Control structure selection for four-product Petlyuk column
- Chapter 7: Conclusions and further work

NTNU – Trondheim
Norwegian University of Science and Technology

Outline

- Introduction & Scope
- Chapter 3: Control structure selection for three-product Petlyuk (dividing-wall) column
- Chapter 4: Steady state and dynamic operation of four-product dividing-wall (Kaibel) columns
- Chapter 5: Active vapor split control for dividing-wall columns
- Chapter 6: Control structure selection for four-product Petlyuk column
- Chapter 7: Conclusions and further work

NTNU – Trondheim
Norwegian University of Science and Technology

Introduction & Scope

- Conventional distillation is energy intensive process.
- **Dividing-wall columns** for multicomponent separation:
  - **Petlyuk Arrangement for 3 & 4 product separation**
  - **Kaibel Arrangement for 4-product separation**
- Potential Energy Savings up to ~30 % in
  - **Kaibel Arrangement**
  - **Petlyuk Arrangements**
- Proven technology, >100 industrial applications

NTNU – Trondheim
Norwegian University of
Science and Technology

Introduction & Scope..

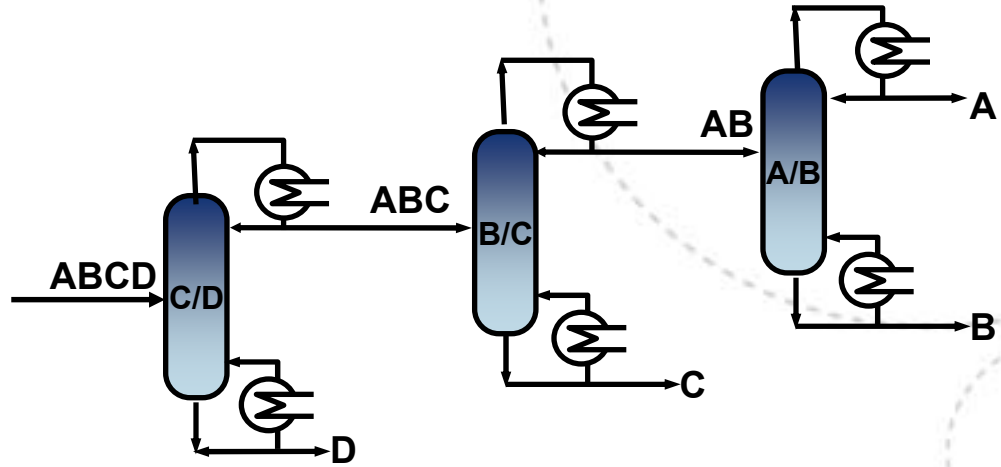

Conventional Indirect sequence

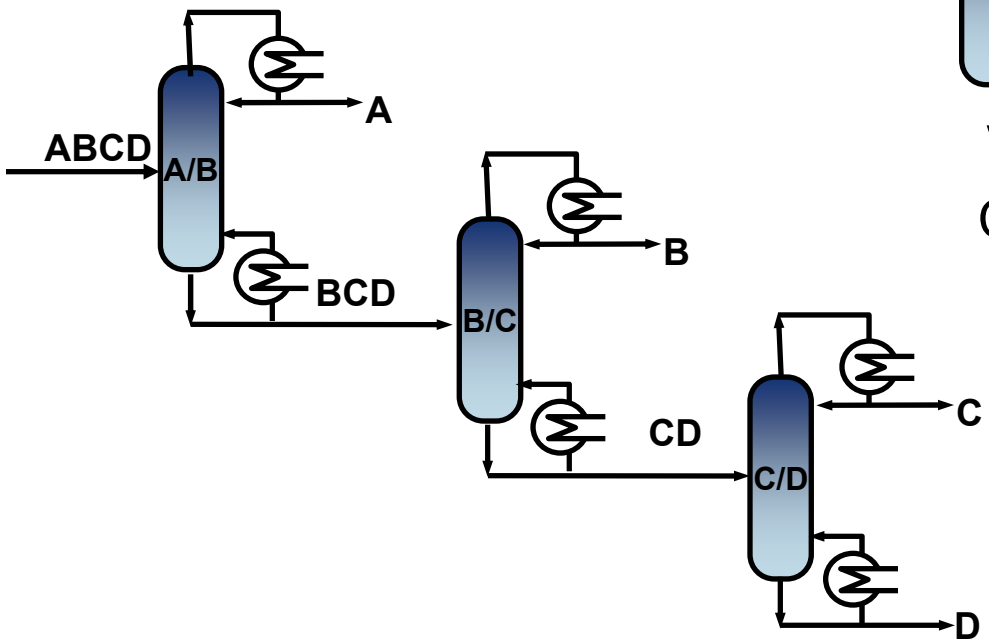

Conventional direct sequence

NTNU – Trondheim
Norwegian University of
Science and Technology

Introduction & Scope..

- Petlyuk arrangement for three-product separation

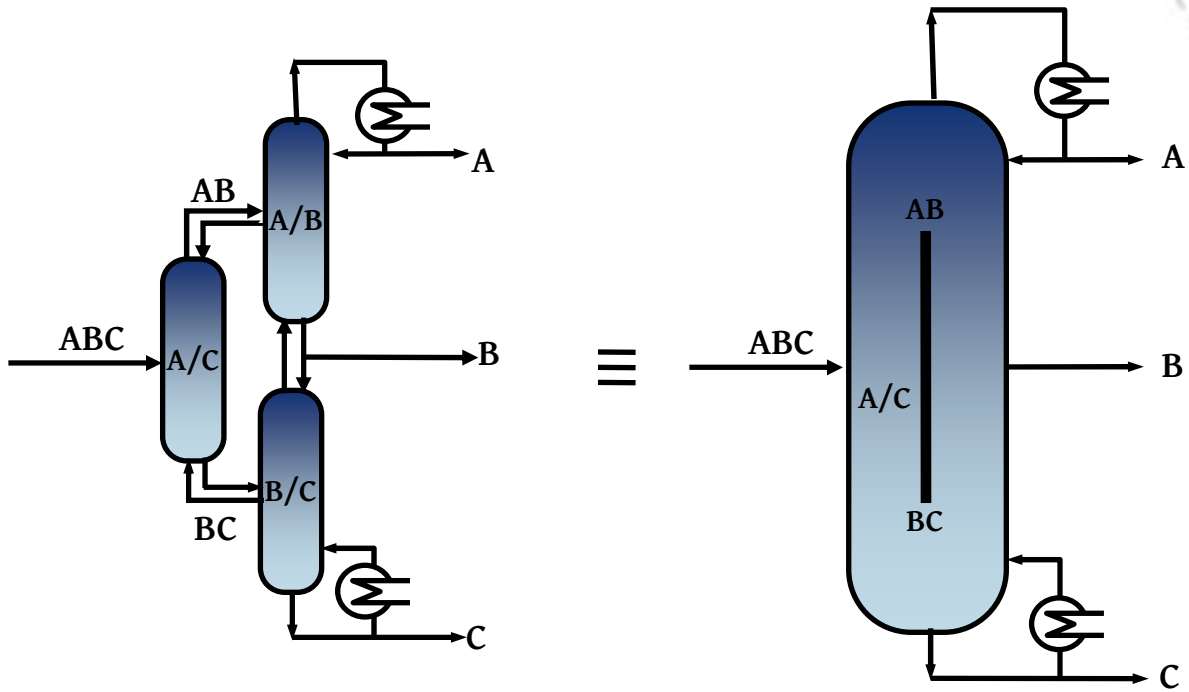

Up to 30 % energy savings compared to conventional arrangements

Capital savings due to fewer reboilers and condensers

Introduction & Scope..

- Kaibel arrangement for four-product separation

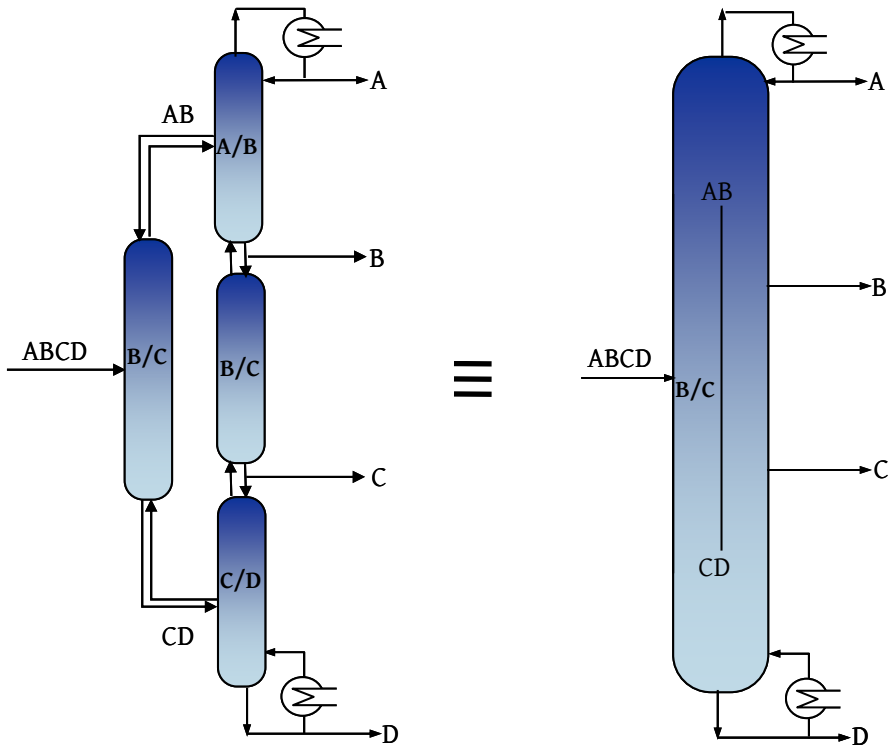

*Upto **30**% energy savings compared to conventional arrangements*

Introduction & Scope..

- Petlyuk arrangement for four-product separation

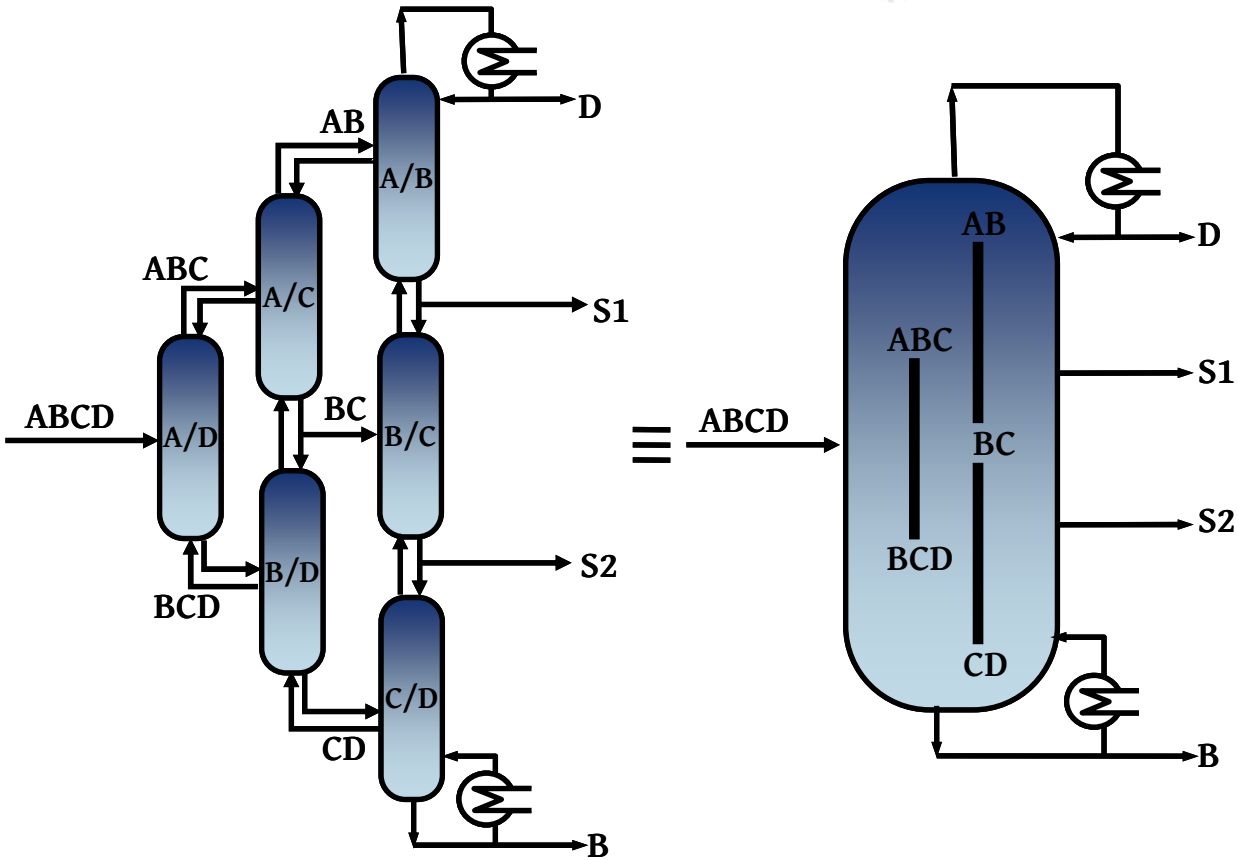

*Upto **50**% energy savings compared to conventional arrangements*

Outline

- Introduction & Scope
- Chapter 3: Control structure selection for three-product Petlyuk (dividing-wall) column
- Chapter 4: Steady state and dynamic operation of four-product dividing-wall (Kaibel) columns
- Chapter 5: Active vapor split control for dividing-wall columns
- Chapter 6: Control structure selection for four-product Petlyuk column
- Chapter 7: Conclusions and further work

NTNU – Trondheim
Norwegian University of Science and Technology

Control Structures for 3-product Petlyuk*

- Degrees of freedom: ***five***
- *The control problem:*

minimize

$$J = V_B$$

$S.T.$

$$impurity \text{ in } top\ product \leq 0.5\%$$

$$light\ key \text{ in } side\ product \leq 0.5\%$$

$$heavy\ key \text{ in } side\ product \leq 0.5\%$$

$$impurity \text{ in } bottom\ product \leq 0.5\%$$

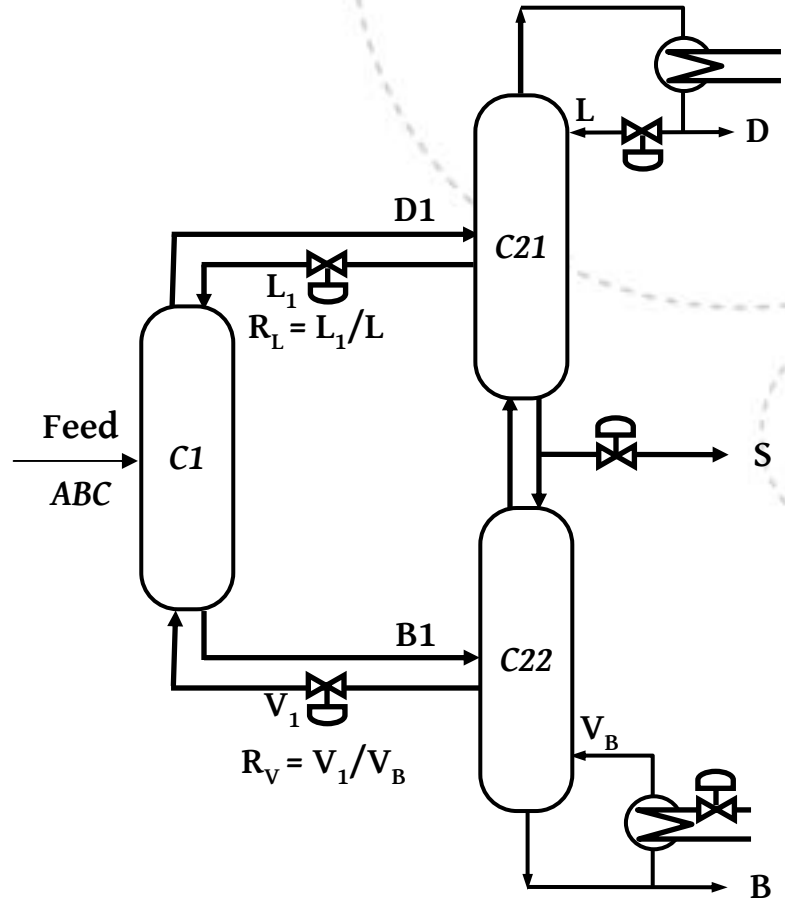

•Constraints above: "optimally active"

•However, the four compositions may not be specified independently, due to presence of "holes" or infeasible states*

* Dwivedi et al (2012), **Wolff & Skogestad (1995)

NTNU – Trondheim
Norwegian University of Science and Technology

Control Structures for 3-product Petlyuk..

- *the four product compositions may not be specified independently, therefore:*
  - Option I: Control $x_A^S + x_C^S$
  - Option II: Over-purify one of the products
    - To satisfy option I & II, three DOFs are consumed: D, S & B
- Two unconstrained DOF: R_L & R_V
  - We propose, two self optimizing variables,
    - x_A^{B1}
    - x_C^{D1}

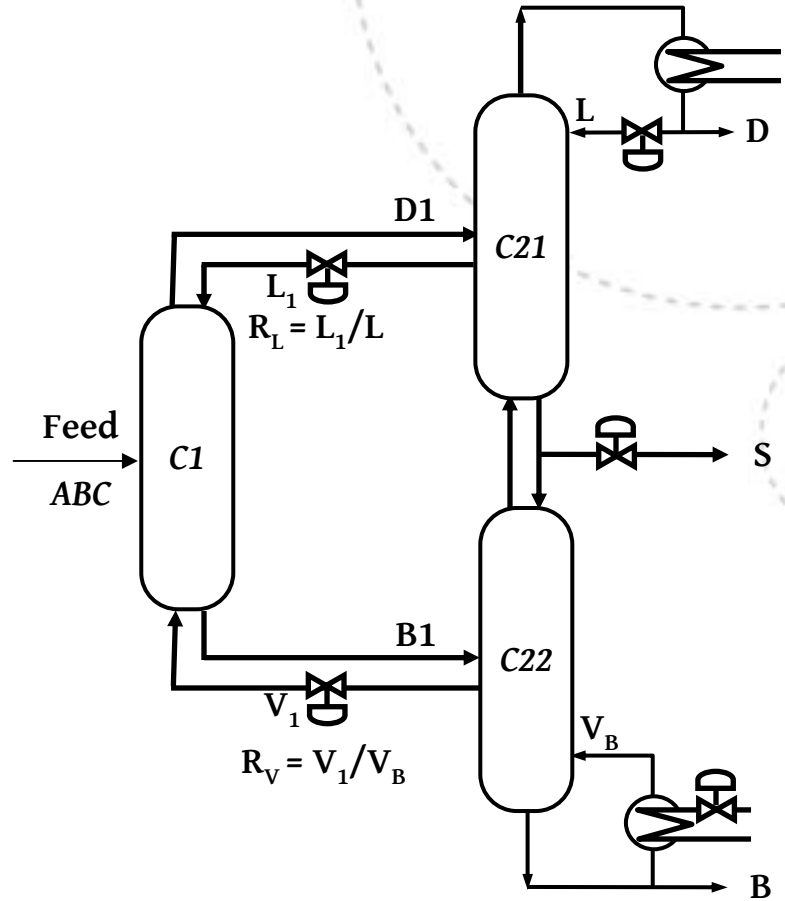

NTNU – Trondheim
Norwegian University of Science and Technology

Control Structures for 3-product Petlyuk..

Setpoint for CVs

Over-purify:

- the prefractionator products (x_A^{B1}, x_C^{D1}) to introduce "back-off"
- the main product, where there is excess energy

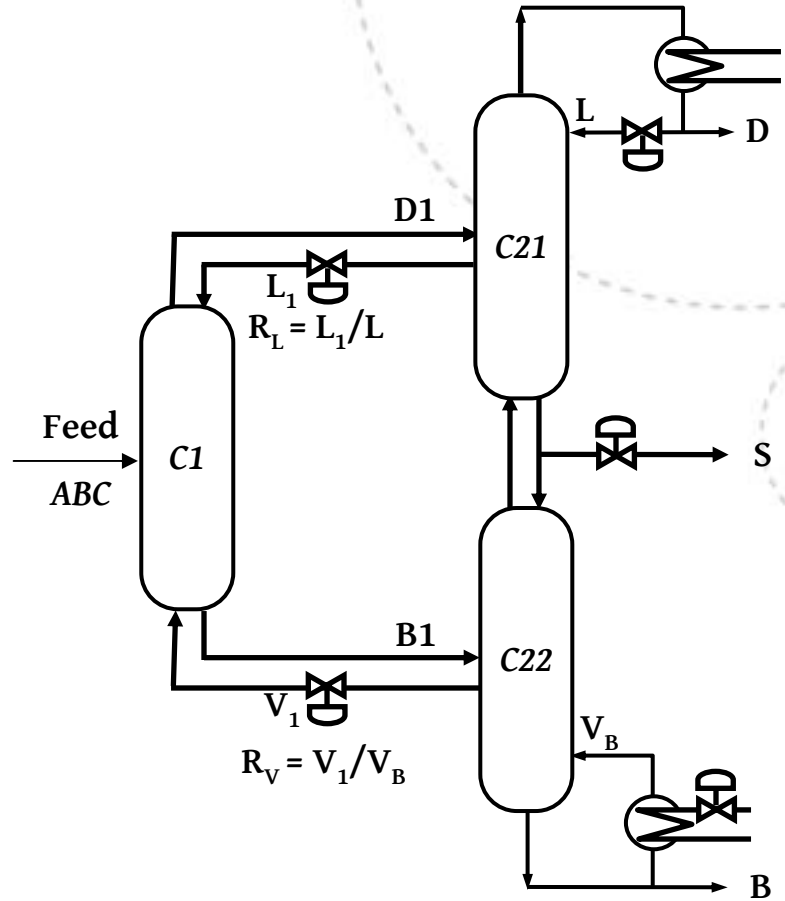

NTNU – Trondheim
Norwegian University of Science and Technology

Control Structures for 3-product Petlyuk..

- CS1 (R_V available):
  - control the sum of the impurities in S ($x^S_A + x^S_C$)

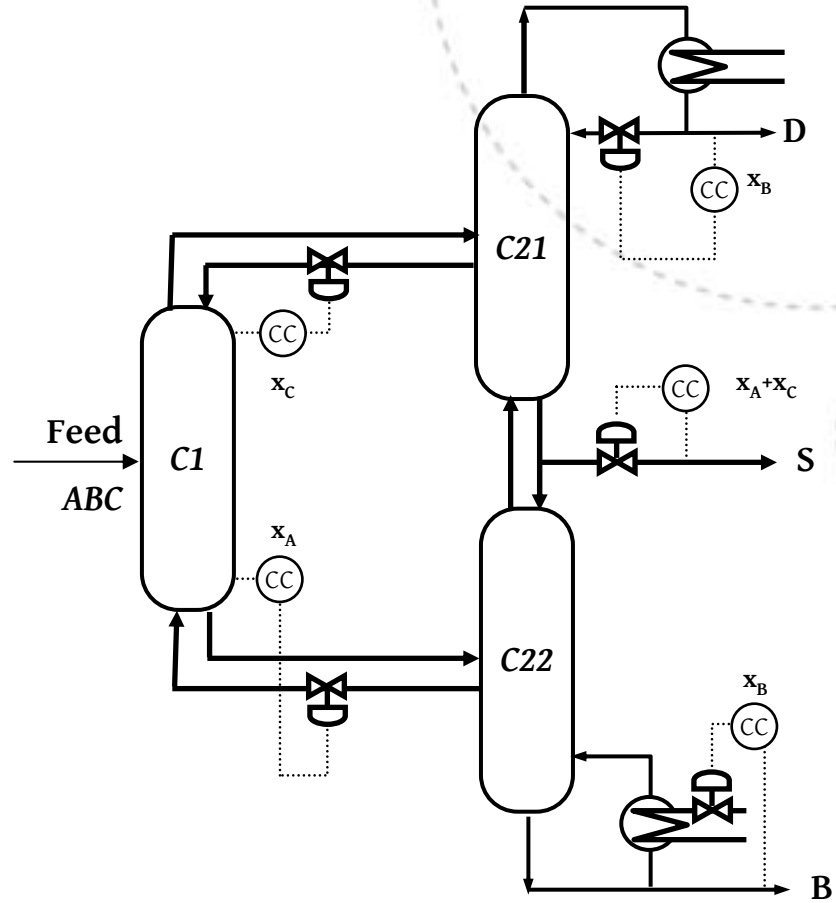

NTNU – Trondheim
Norwegian University of Science and Technology

Control Structures for 3-product Petlyuk..

- Closed loop simulations from CS1

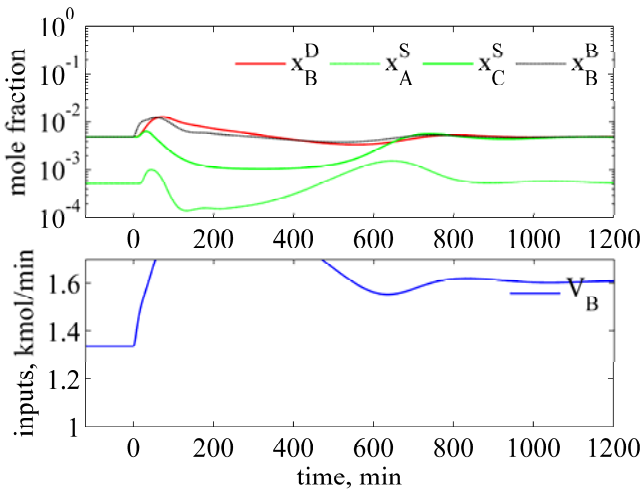

Feed +20 %

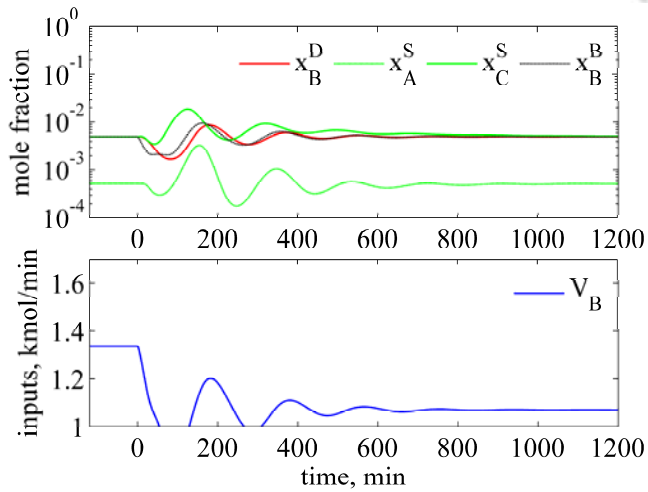

Feed -20 %

Feed rate changes may be handled well with CS1

NTNU – Trondheim
Norwegian University of
Science and Technology

Control Structures for 3-product Petlyuk..

- Closed loop simulations from CS1
  - ***Poor dynamic response for some feed compositions using CS1***

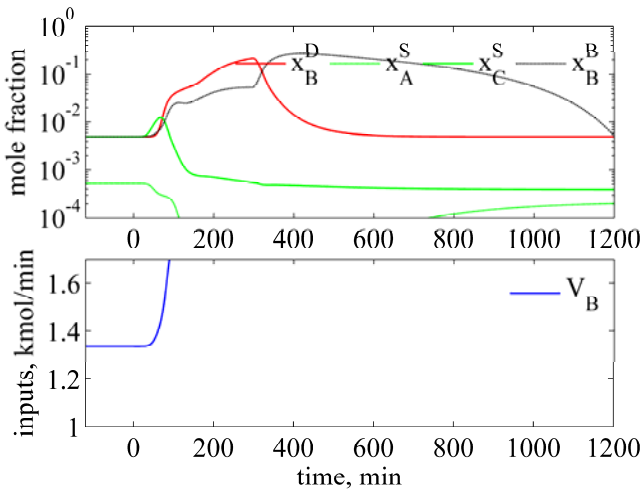

z^F = [**13.3 53.3** 33.3]

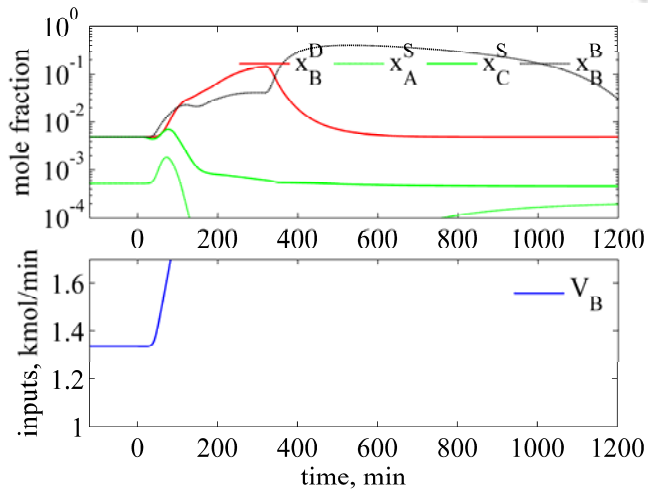

z^F = [33.3 **53.3 13.3**]

Side product flow is a poor MV, as it shows opposite gain for the two keys

NTNU – Trondheim
Norwegian University of Science and Technology

Control Structures for 3-product Petlyuk..

- CS2 (R_V available):
  - overpurify one of the products
  - Use max selector with boil up

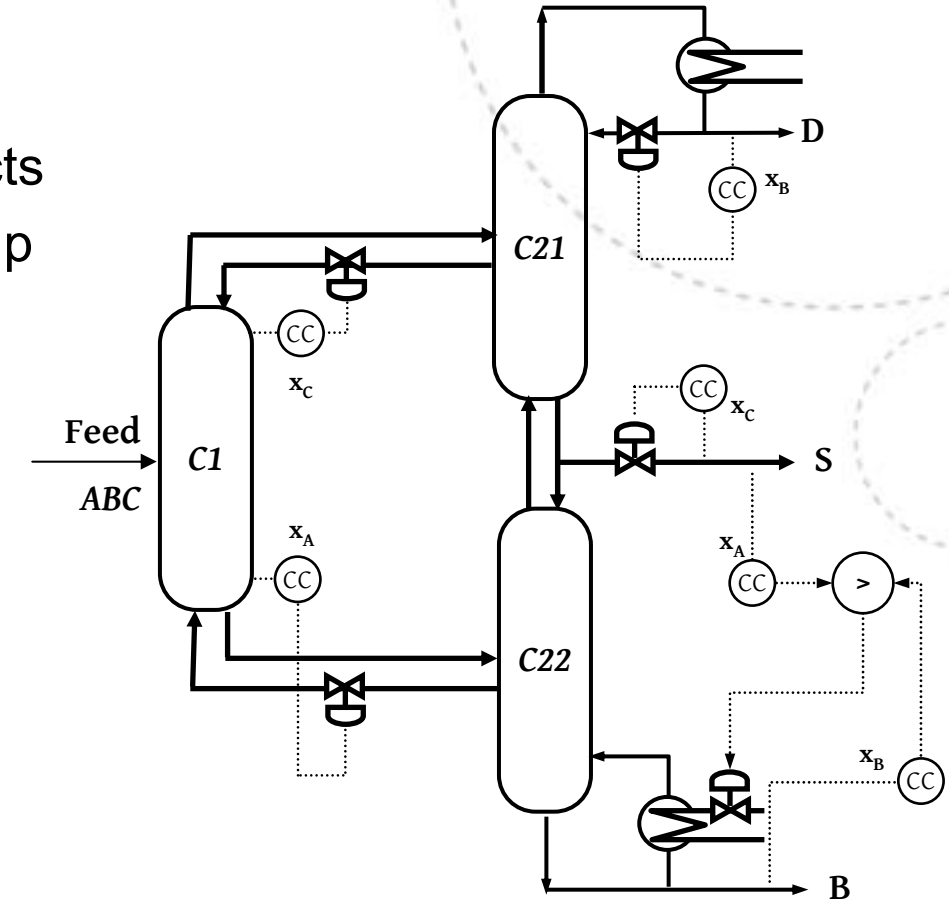

NTNU – Trondheim
Norwegian University of
Science and Technology

Control Structures for 3-product Petlyuk..

- Closed loop simulations from CS2

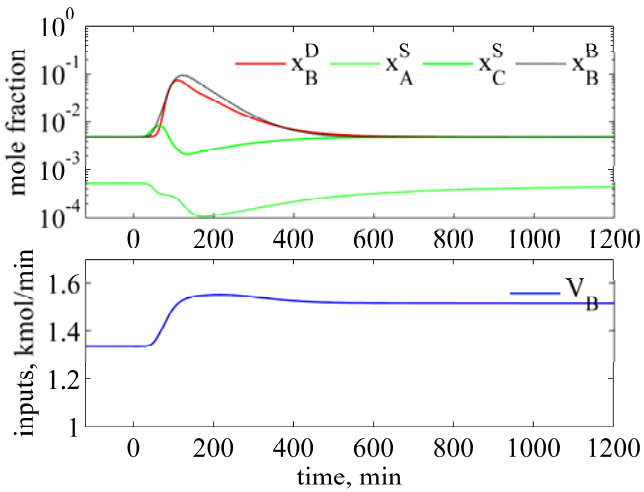

z^F = [**13.3 53.3** 33.3]

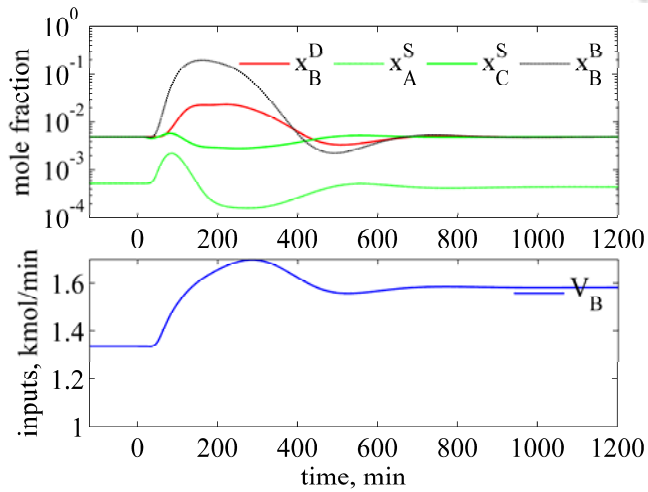

z^F = [33.3 **53.3 13.3**]

Good performance for feed composition disturbances (and feed rate)

NTNU – Trondheim
Norwegian University of
Science and Technology

Control Structures for 3-product Petlyuk..

- CS3 (R_V **NOT** available)*:
  - Light key in side product and light key in prefractionator bottoms remains uncontrolled
  - Recommended when B/C is the difficult split

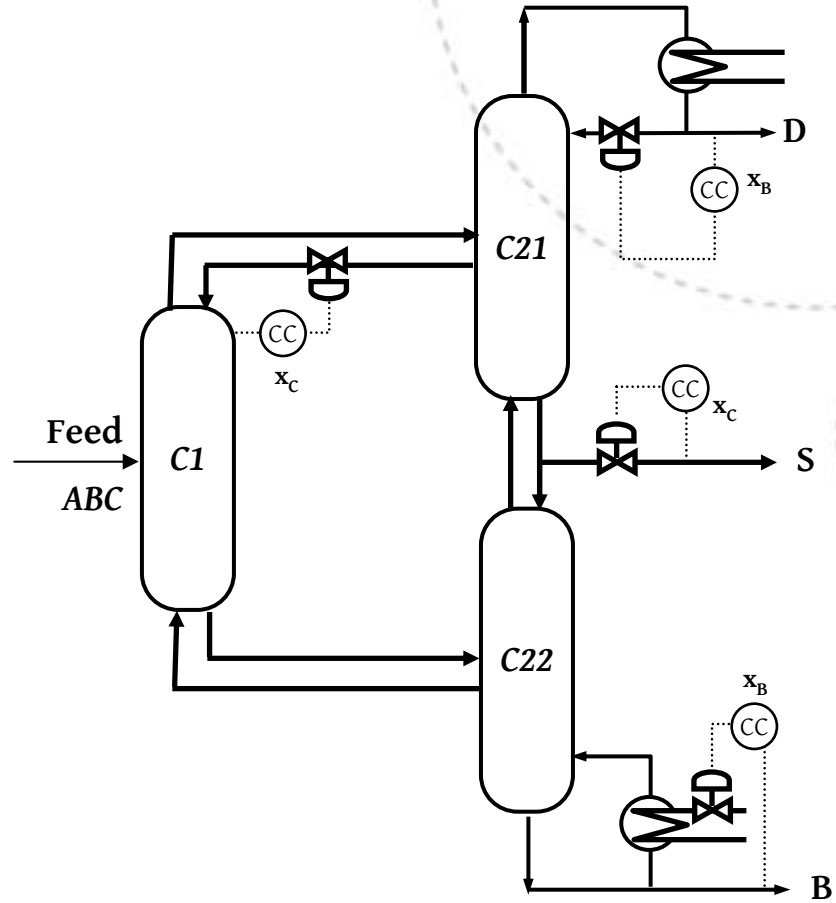

NTNU – Trondheim
Norwegian University of Science and Technology

*Ling and Luyben [2009], Kiss and Rewagad [2011]

Control Structures for 3-product Petlyuk..

- Closed loop simulations from CS3

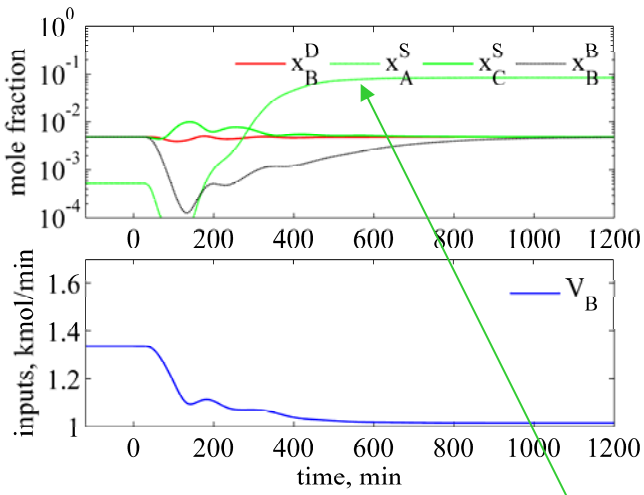

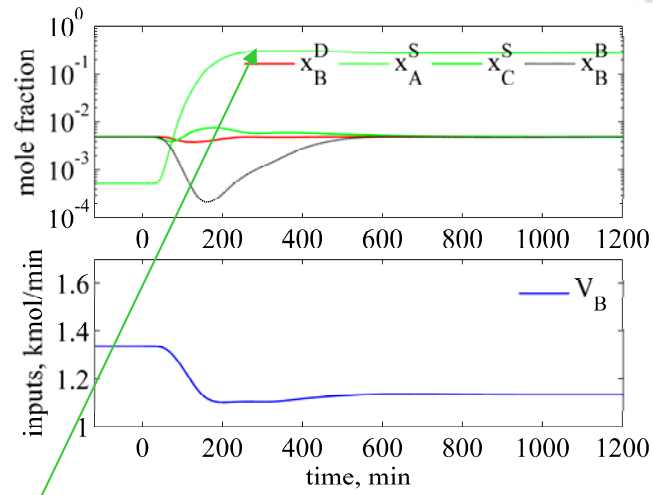

z^F = [33.3 **13.3 53.3**]

z^F = [**53.3 13.3** 33.3]

x_A^S > 0.5% (Constraint)

NTNU – Trondheim
Norwegian University of Science and Technology

Control Structures for 3-product Petlyuk..

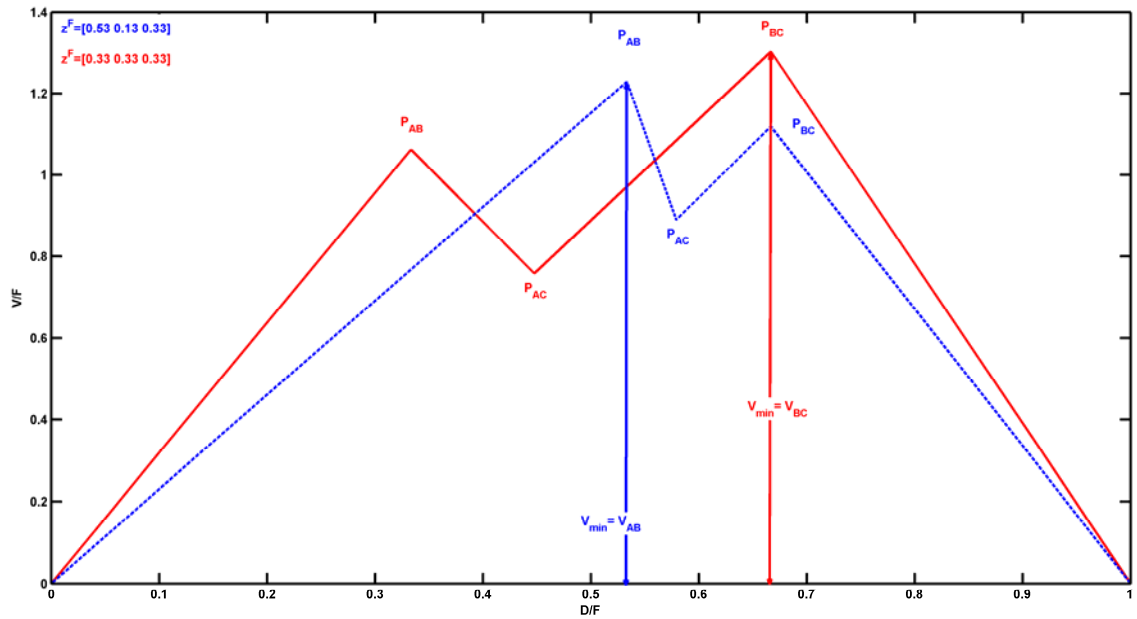

When A/B split becomes more difficult split, CS3 fails!!

NTNU – Trondheim
Norwegian University of
Science and Technology

Control Structures for 3-product Petlyuk..

- CS4 (R_V NOT available):
  - Use max selector with boil up
  - overpurify one/two of the products

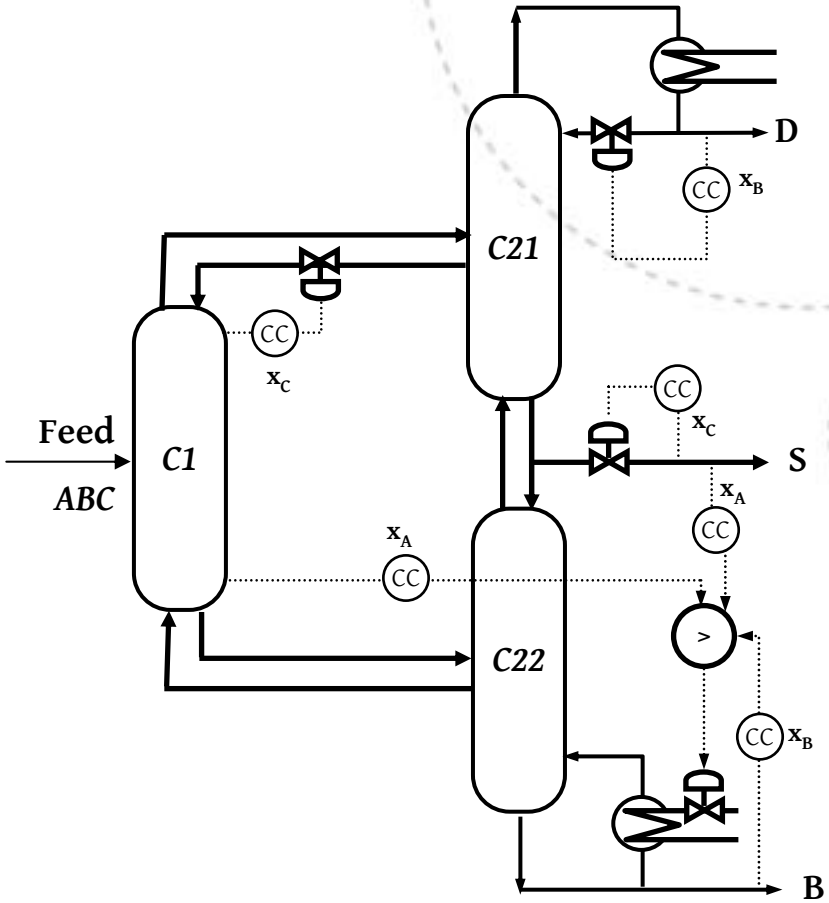

NTNU – Trondheim
Norwegian University of Science and Technology

Control Structures for 3-product Petlyuk..

- Closed loop simulations from CS4

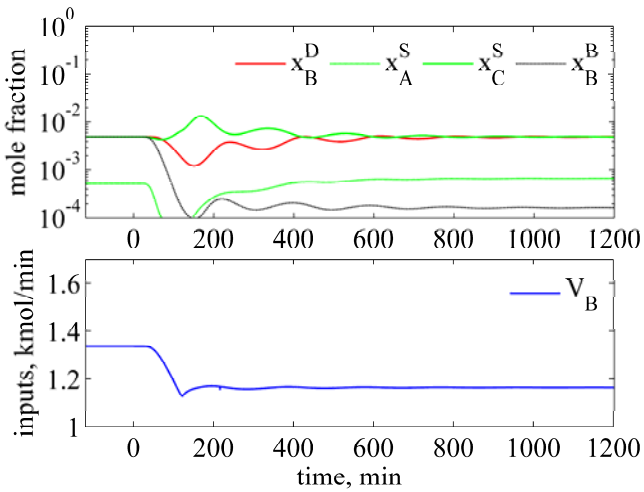

z^F = [33.3 **13.3 53.3]**

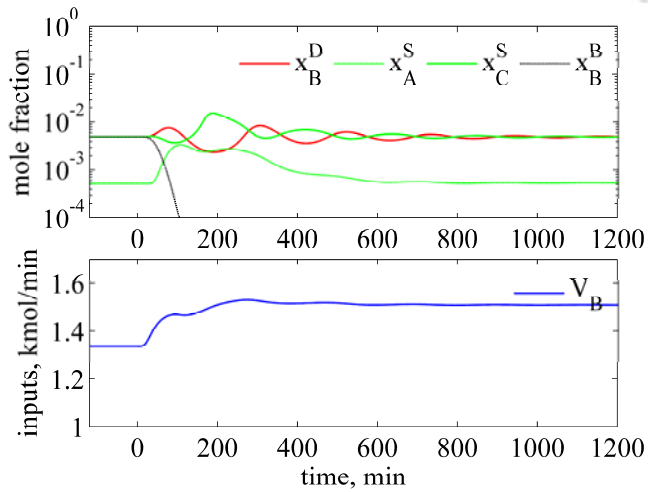

z^F = **[53.3 13.3** 33.3]

Good performance for feed composition disturbances (and feed rate)

NTNU – Trondheim
Norwegian University of
Science and Technology

Control Structures for 3-product Petlyuk..

Summary so far

- ***Decentralized PI control structures with selector switch can give good regulation for 3-Product Petlyuk Column***

- ***The over-purification cost little extra energy***

NTNU – Trondheim
Norwegian University of
Science and Technology

Outline

- Introduction & Scope
- Chapter 3: Control structure selection for three-product Petlyuk (dividing-wall) column
- Chapter 4: Steady state and dynamic operation of four-product dividing-wall (Kaibel) columns
- Chapter 5: Active vapor split control for dividing-wall columns
- Chapter 6: Control structure selection for four-product Petlyuk column
- Chapter 7: Conclusions and further work

NTNU – Trondheim
Norwegian University of Science and Technology

Operation of 4-product Kaibel column*

- Height: 8 meters
- Atmospheric pressure
- Vacuum glass sections
- 4 products
- Packed Column with 6 mm Raschig rings
- Product & liquid split valves are solenoid operated
- Vapor split valves are motor driven
- Labview interface

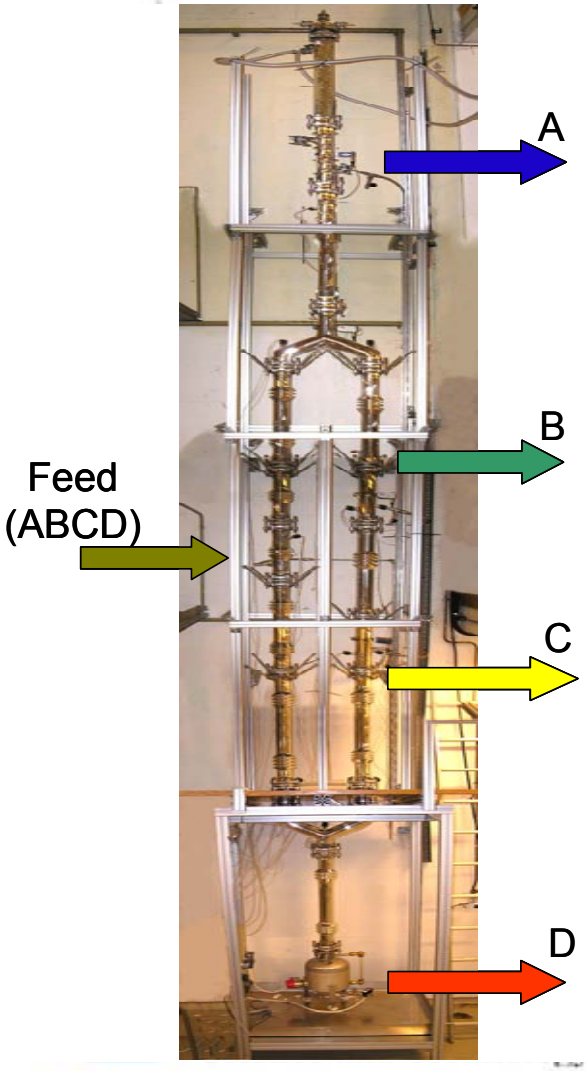

*Dwivedi et al (2012)

Operation of 4-product Kaibel column..

- **4-point decentralized temperature control**
  - ***one* temperature in prefractionator**
  - ***three* temperatures in main column**

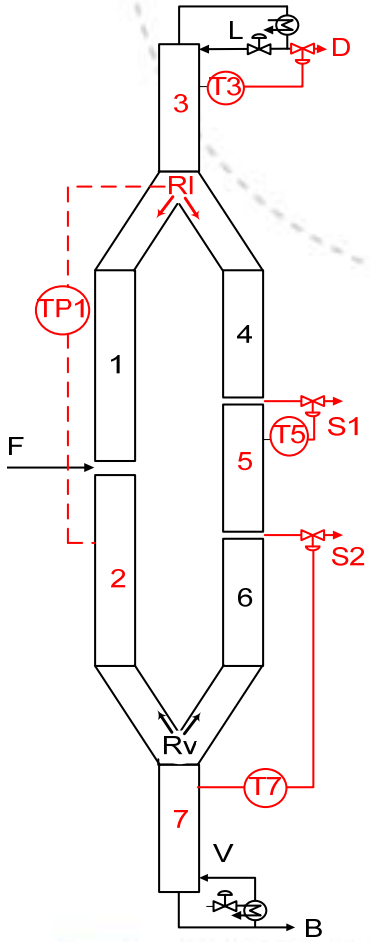

NTNU – Trondheim
Norwegian University of Science and Technology

Operation of 4-product Kaibel column..

- Cold Start-up
  - **Four temperatures are adjusted in closed loop to guide to desired steady state profile**

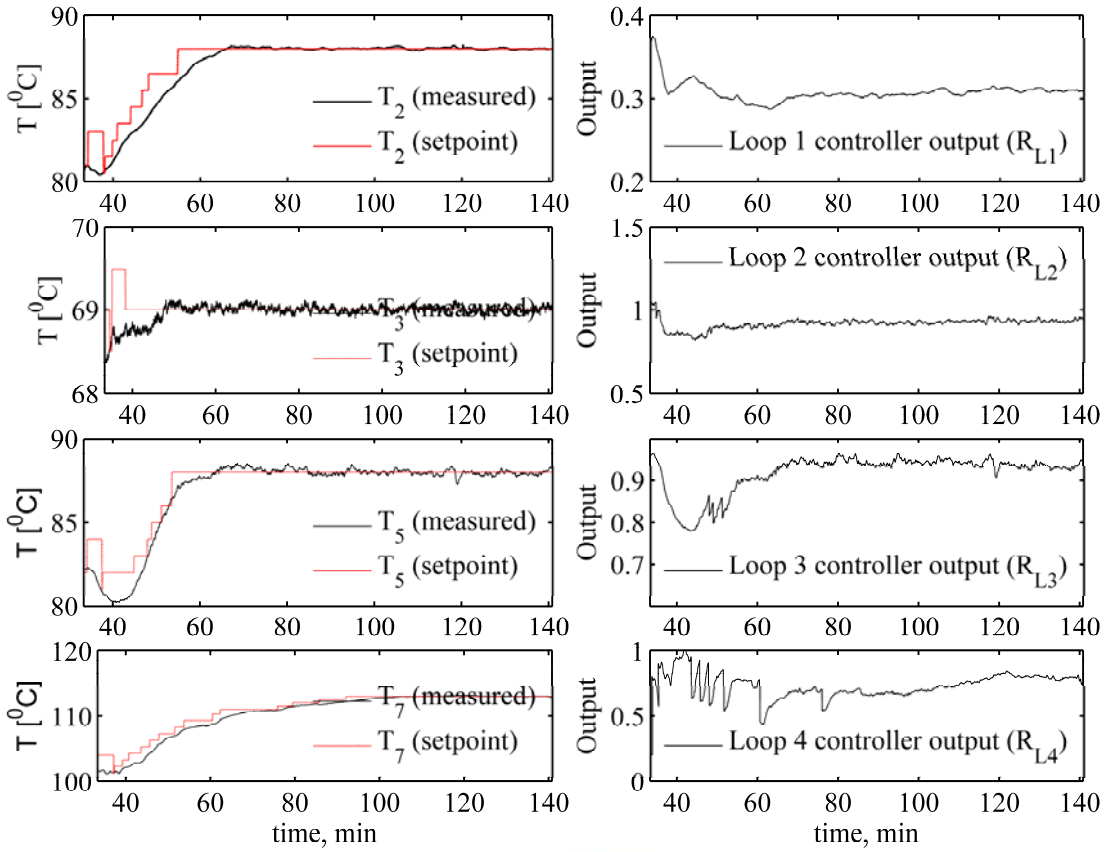

NTNU – Trondheim
Norwegian University of Science and Technology

Operation of 4-product Kaibel column..

- Steady state operation using four-point CS

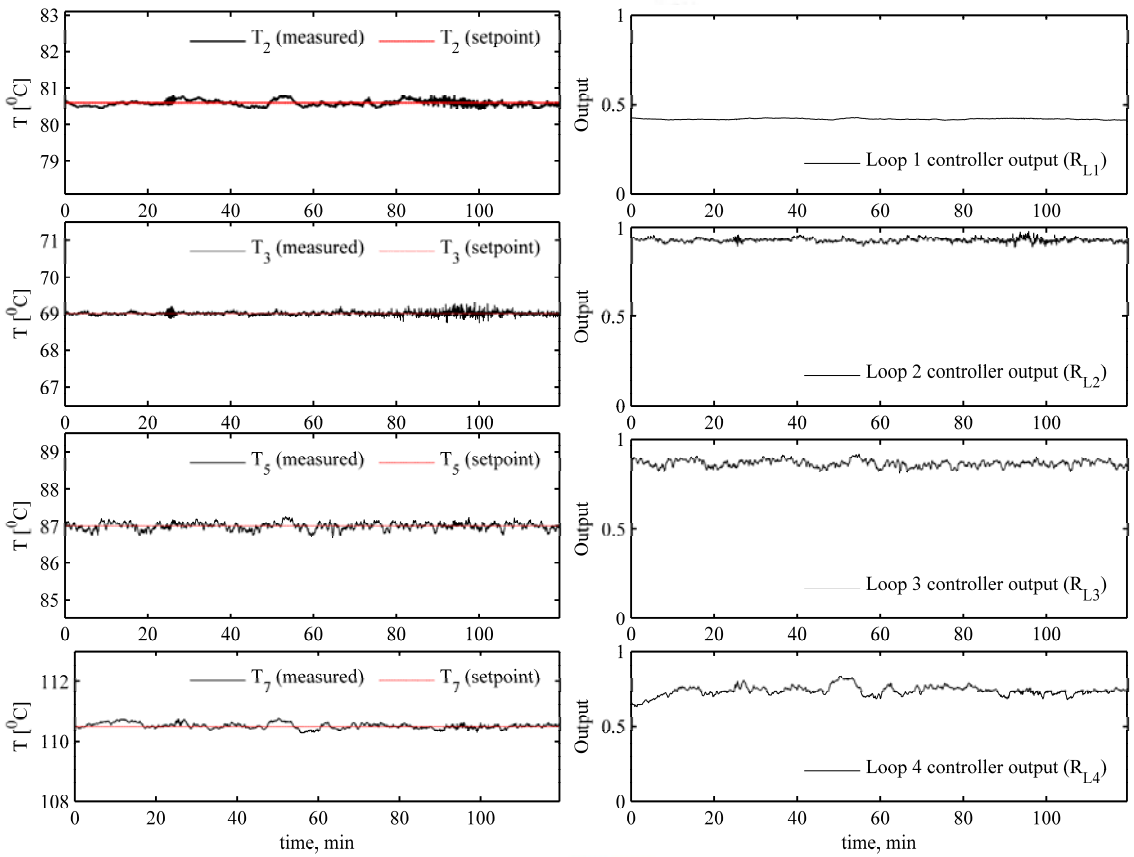

NTNU – Trondheim
Norwegian University of Science and Technology

Operation of 4-product Kaibel column..

- Set point changes using four-point CS

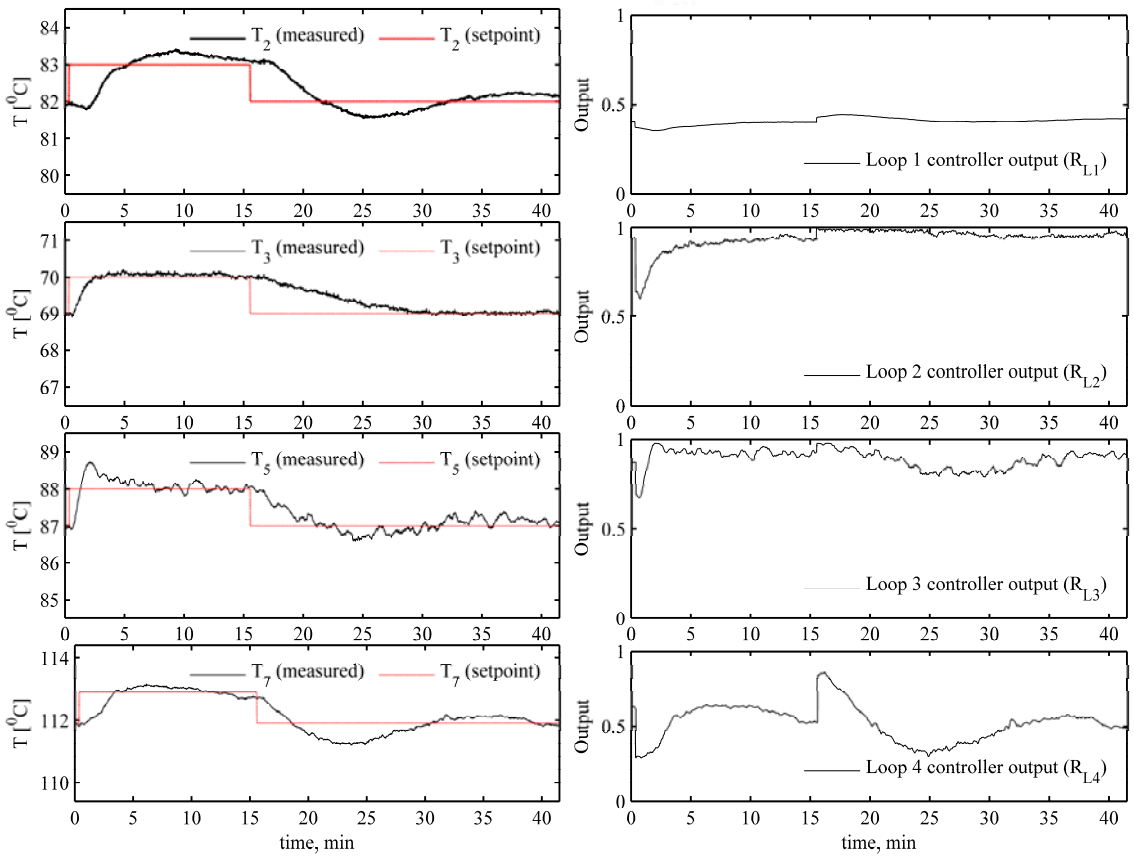

NTNU – Trondheim
Norwegian University of Science and Technology

Operation of 4-product Kaibel column..

- Disturbance: +20% Feed Rate

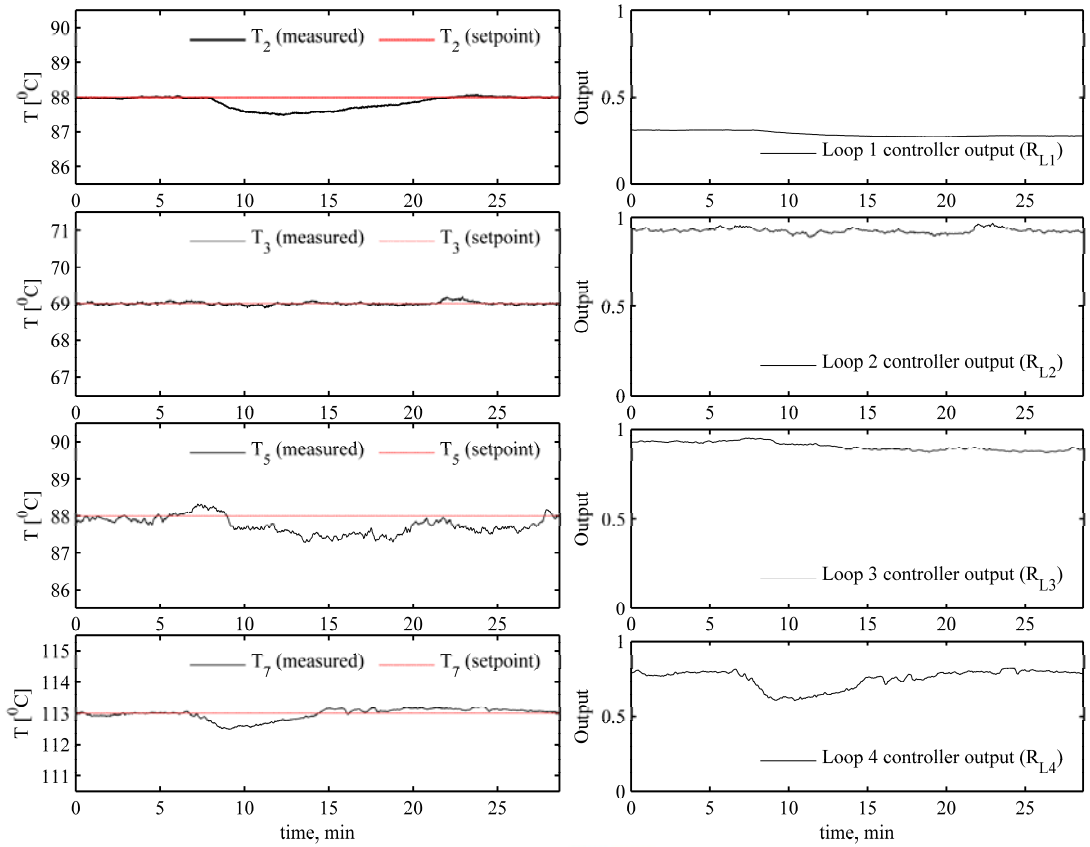

NTNU – Trondheim
Norwegian University of Science and Technology

Operation of 4-product Kaibel column..

Experimental Data vs Model

Experimental Data:

- Temperature snapshots
- Composition Snapshots
- Manipulated variables: Power input, split ratios

Model (Assumptions):

- Equilibrium Stage Model
- VLE with Wilson model in liquid state, vapor ideal
- Constant molar overflow

NTNU – Trondheim
Norwegian University of
Science and Technology

Operation of 4-product Kaibel column..

Model Fitting procedure:

Degree of freedom

1. number of theoretical stages (fixed, using HETP estimation)
2. boilup (fixed, from experiments)
3. feed composition (fixed, from experiments)
4. liquid split ratio (fixed, from experiments)
5. vapor split ratio (adjusted, using experimental data)
6. distillate product split ratio (adjusted, using experimental data)
7. upper side product split ratio (adjusted, using experimental data)
8. lower side product split ratio (adjusted, using experimental data)

NTNU – Trondheim
Norwegian University of Science and Technology

Operation of 4-product Kaibel column..

Model Fitting Results

Temperatures

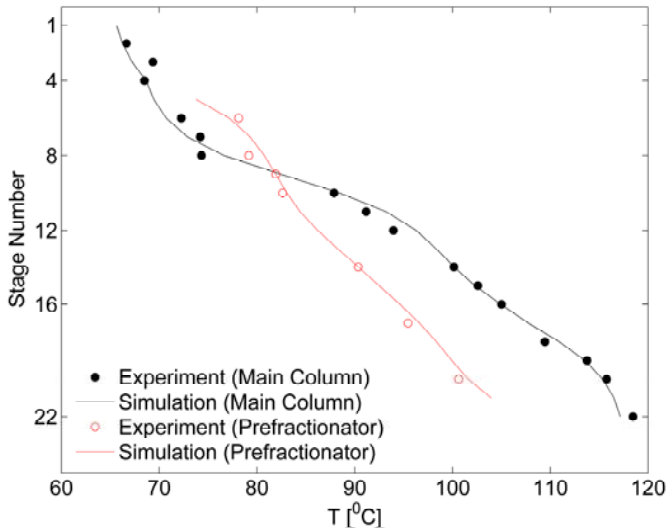

Compositions

	Experiment Run 10								
	Feed	D		S1		S2		B	
comp	exp & sim	exp	sim	exp	sim	exp	sim	exp	sim
methanol	**20.4**	**94.9**	**94.9**	29.9	27.4	0	0.6	0	0
ethanol	**27.4**	5.1	5.1	**51.2**	**51.2**	5.9	6.6	0	0
propanol	**28.5**	0	0	18.9	21.3	**87.5**	**87.5**	4.6	2.43
butanol	**23.7**	0	0	0	0	6.6	5.3	95.4	97.6

Inputs

Degree of freedom	Run 10	
	exp	sim
R_{L1}	**0.15**	**0.15**
R_{L2}	0.98	0.98
R_{L3}	0.72	0.81
R_{L4}	0.83	0.91
R_V	-	0.30

Very good agreement between the experimental steady-state data and the equilibrium stage model

NTNU – Trondheim
Norwegian University of Science and Technology

Operation of 4-product Kaibel column..

- Experimental Results vs Optimal Operation

	Mode I	Mode II
Objective	$J = x^{S1}_{EtOH} + x^{S2}_{PrOH}$	$J = x^{D}_{MeOH} + x^{S1}_{EtOH} + x^{S2}_{PrOH} + x^{B}_{BuOH}$
Degrees of freedom	Liquid split ratio, R_{L1} Distillate split ratio, R_{L2} Upper side product split ratio, R_{L3} Lower side product split ratio, R_{L4} Vapor split ratio, R_V	R_{L1} R_{L2} R_{L3} R_{L4} R_V
Constraints	boilup = nominal feed rate = nominal feed composition = nominal feed liquid fraction = nominal x^{D}_{MeOH} = nominal x^{B}_{BuOH} = nominal	boilup = nominal feed rate = nominal feed composition = nominal feed liquid fraction = nominal

the experimental results were close to "optimal" operations

NTNU – Trondheim
Norwegian University of Science and Technology

Operation of 4-product Kaibel column..

Summary so far

- stable operation of the four product Kaibel column can be achieved with the 4-point temperature control scheme for start-up, steady state operation, as well as servo-regulatory performance

- equilibrium stage model can be fitted to the experiments

NTNU – Trondheim
Norwegian University of Science and Technology

Outline

- Introduction & Scope
- Chapter 3: Control structure selection for three-product Petlyuk (dividing-wall) column
- Chapter 4: Steady state and dynamic operation of four-product dividing-wall (Kaibel) columns
- Chapter 5: Active vapor split control for dividing-wall columns
- Chapter 6: Control structure selection for four-product Petlyuk column
- Chapter 7: Conclusions and further work

NTNU – Trondheim
Norwegian University of Science and Technology

Active vapor split control*

Motivation boilup depends on Rv

- energy saving potential can be lost if the column is operated away from the optimum vapor split ratio
- Active vapor split may ensure setting the optimum vapor split

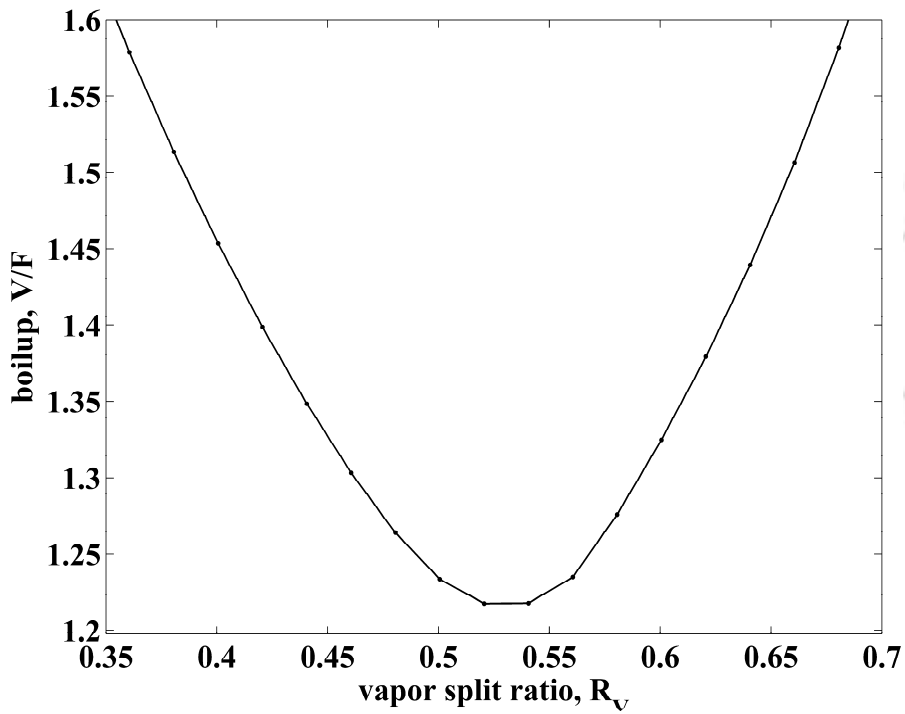

*Dwivedi et al (2012)

NTNU – Trondheim
Norwegian University of Science and Technology

Active vapor split control..

the experimental setup

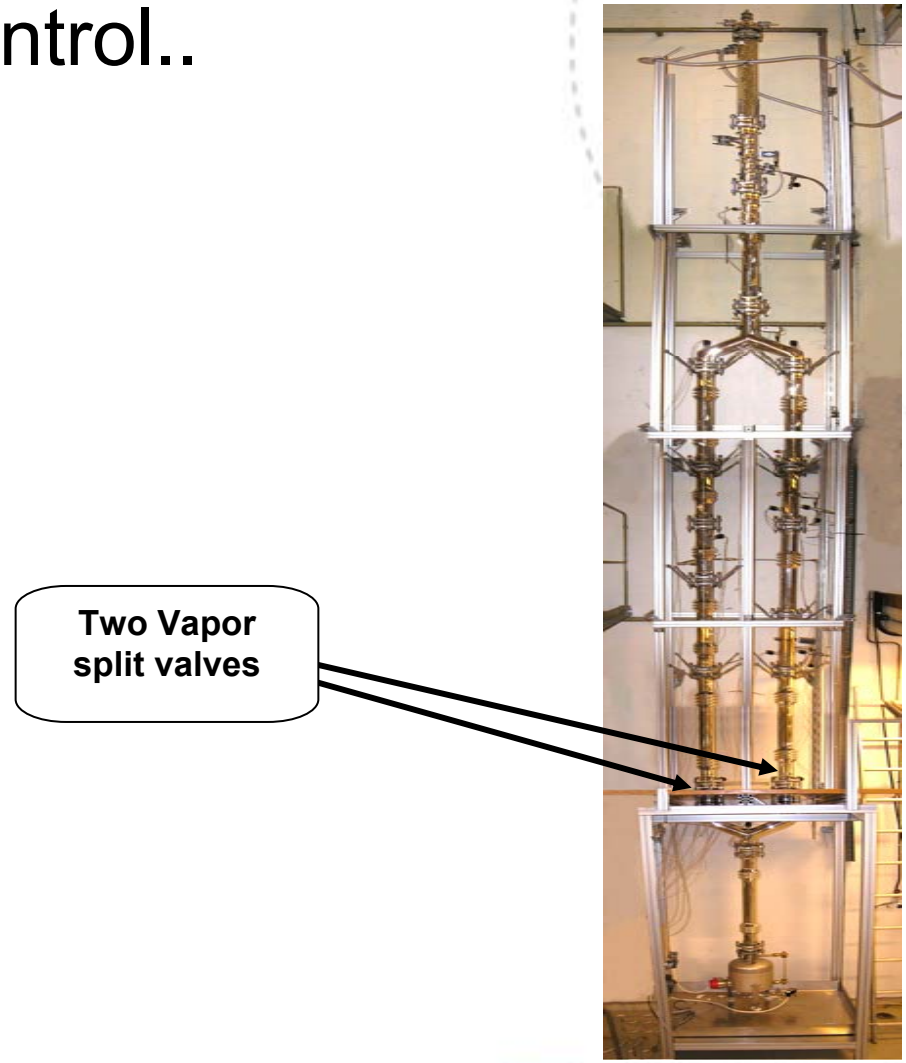

NTNU – Trondheim
Norwegian University of
Science and Technology

Active vapor split control..

The vapor split valve

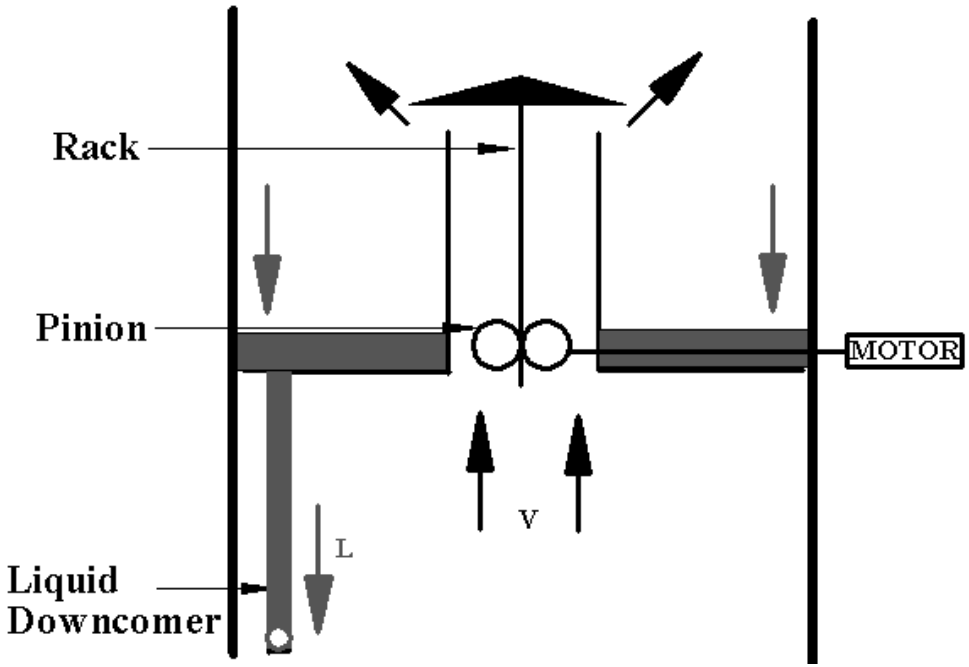

Active vapor split control..

Vapor Split valve behavior

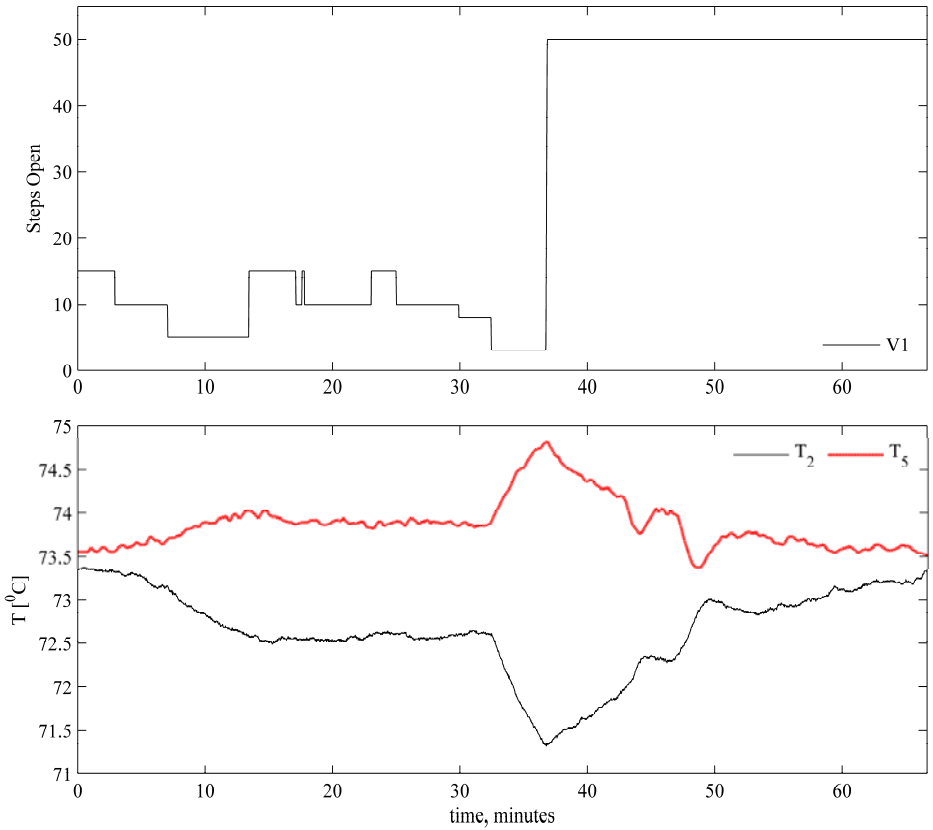

- *only the first 10 steps of the 150 steps are really effective, the resolution is poor*
- *the valve opening is too large*

Active vapor split control..

The initial total reflux experiment

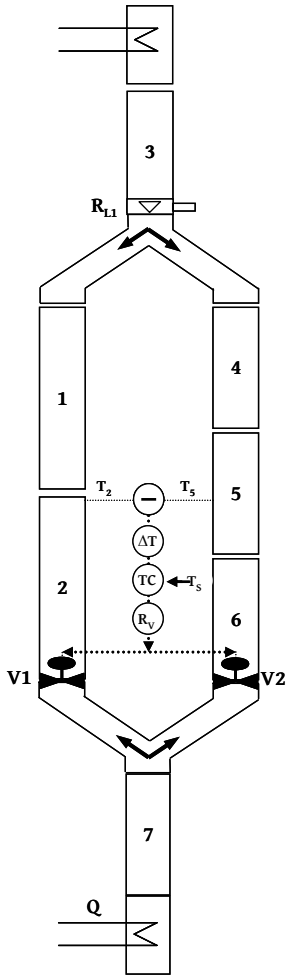

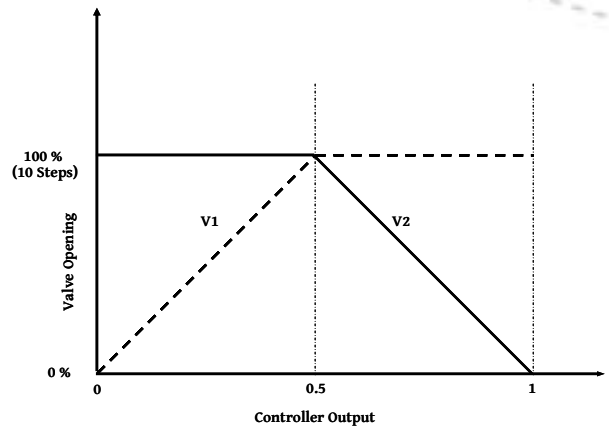

NTNU – Trondheim
Norwegian University of
Science and Technology

Active vapor split control..

The initial total reflux experiment

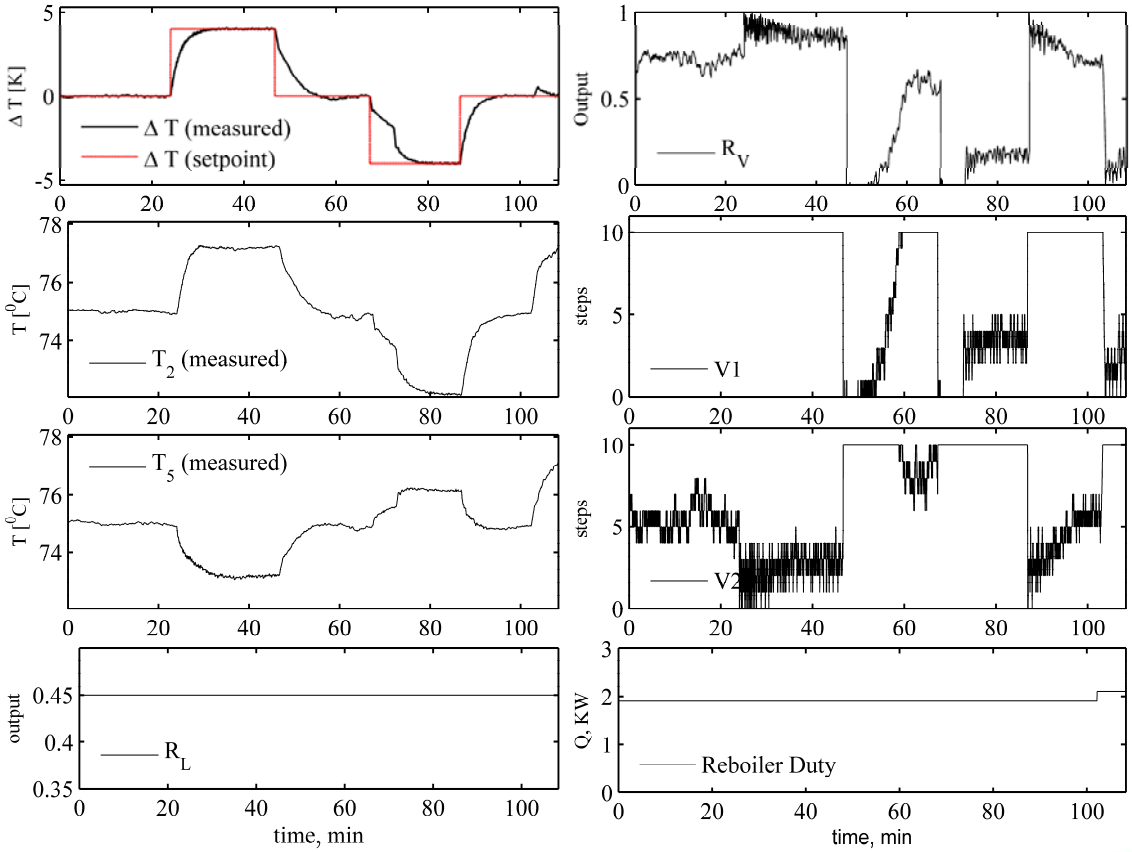

Vapor split control works well in closed loop for set point changes and disturbances

NTNU – Trondheim
Norwegian University of Science and Technology

Active vapor split control..

Active Vapor split control for four-product Kaibel column

- **4-point decentralized temperature control**
  - ***one*** **temperature in prefractionator by the vapor split valve**
  - ***three*** **temperatures in main column using product flows D, S1 & S2**

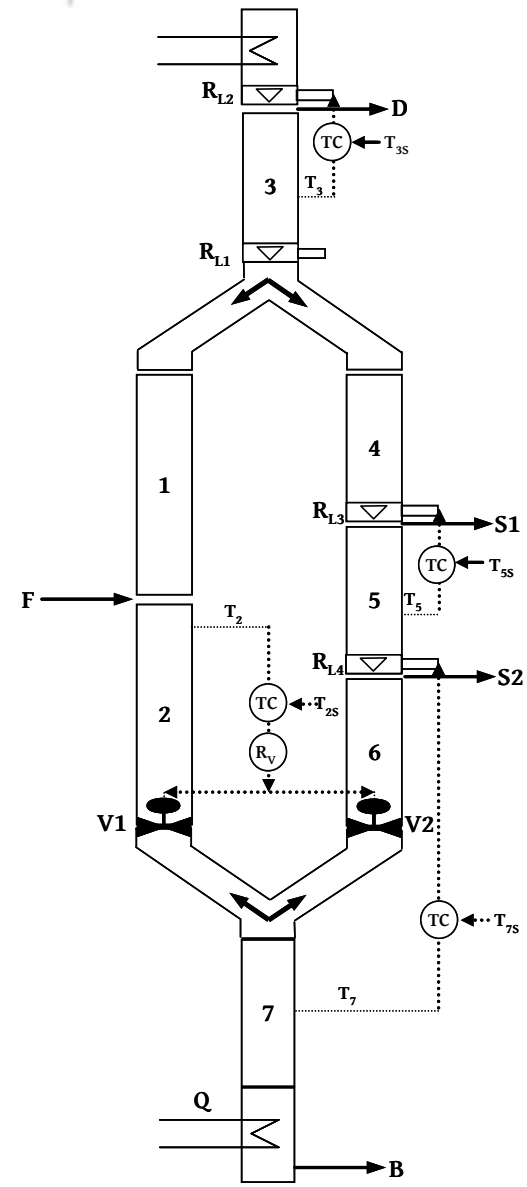

Active vapor split control..

Closed loop Results

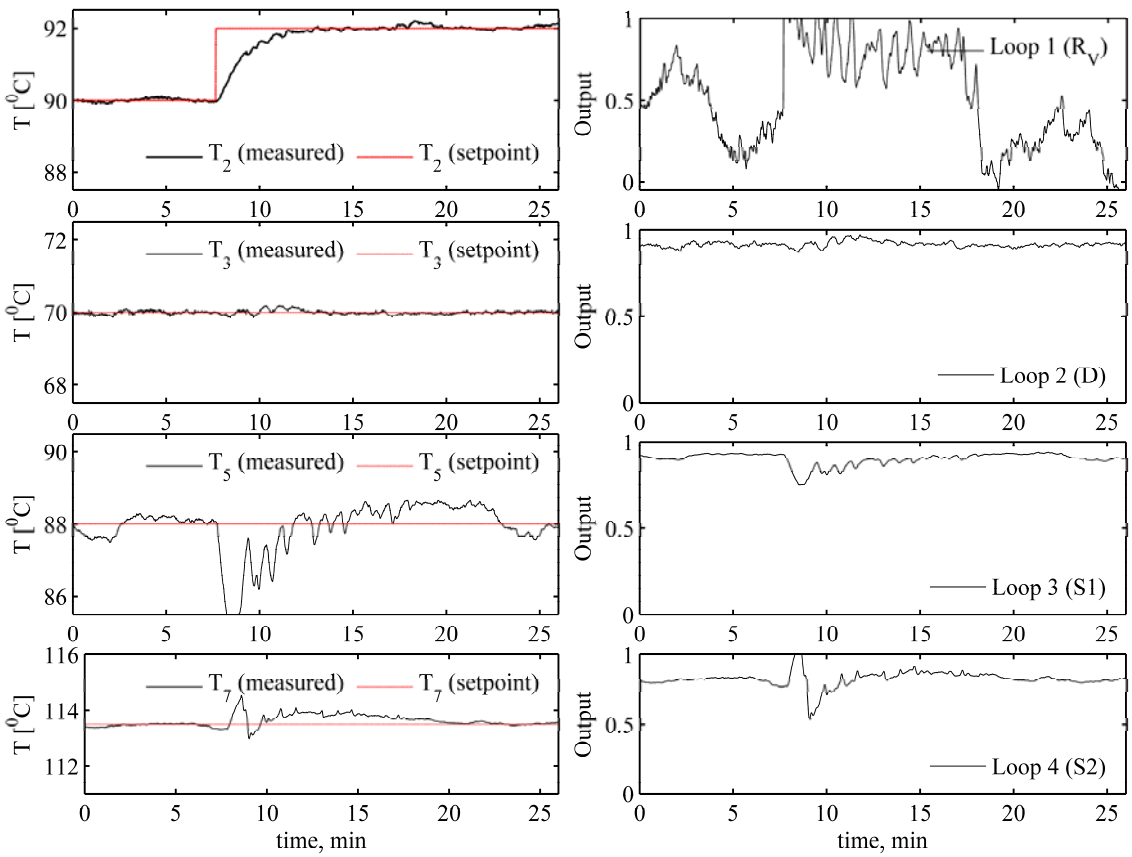

Vapor split control works well in closed loop for control of 4-product Kaibel column

NTNU – Trondheim
Norwegian University of Science and Technology

Active vapor split control..

Recommendations:

- feedback control using vapor split valves to set “optimum vapor split”
  - the vapor split valve is a very fast handle
  - no need to precisely measure the vapor split, the feedback action can “drive” the vapor split to its optimum value
- the liquid split, is a precise input, can be used in “open loop/ manual mode” for any economic objective
- Use of two vapor valves with split range logic
  - to get the full range of changes in vapor split
  - Minimum pressure drop

NTNU – Trondheim
Norwegian University of Science and Technology

Outline

- Introduction & Scope
- Chapter 3: Control structure selection for three-product Petlyuk (dividing-wall) column
- Chapter 4: Steady state and dynamic operation of four-product dividing-wall (Kaibel) columns
- Chapter 5: Active vapor split control for dividing-wall columns
- Chapter 6: Control structure selection for four-product Petlyuk column
- Chapter 7: Conclusions and further work

NTNU – Trondheim
Norwegian University of Science and Technology

Control Structures for 4-product Petlyuk Column*

- Degrees of freedom: *ten*
- *The control problem:*

J =cost of feed – value of products + cost of energy

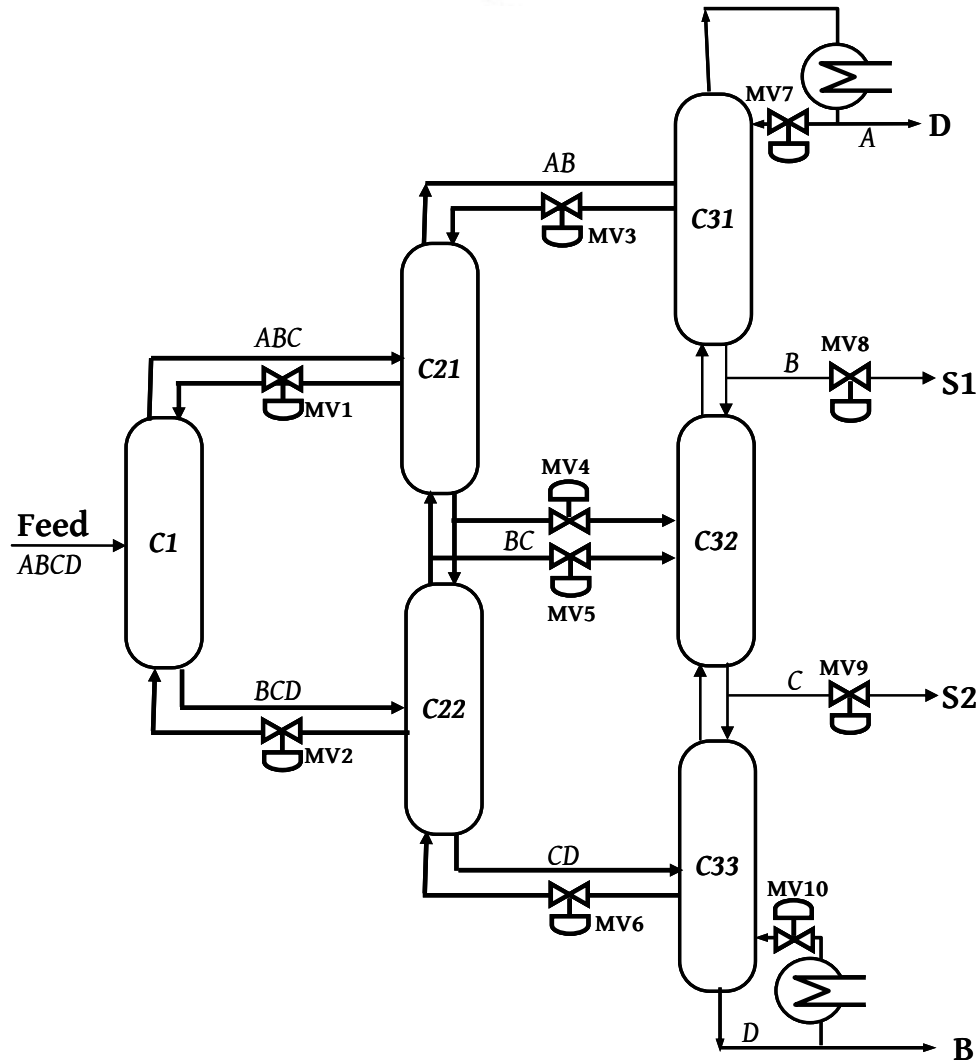

*Dwivedi et al (2012)

Control Structures for 4-product Petlyuk Column

Nominal inputs obtained from the V_{min} diagram

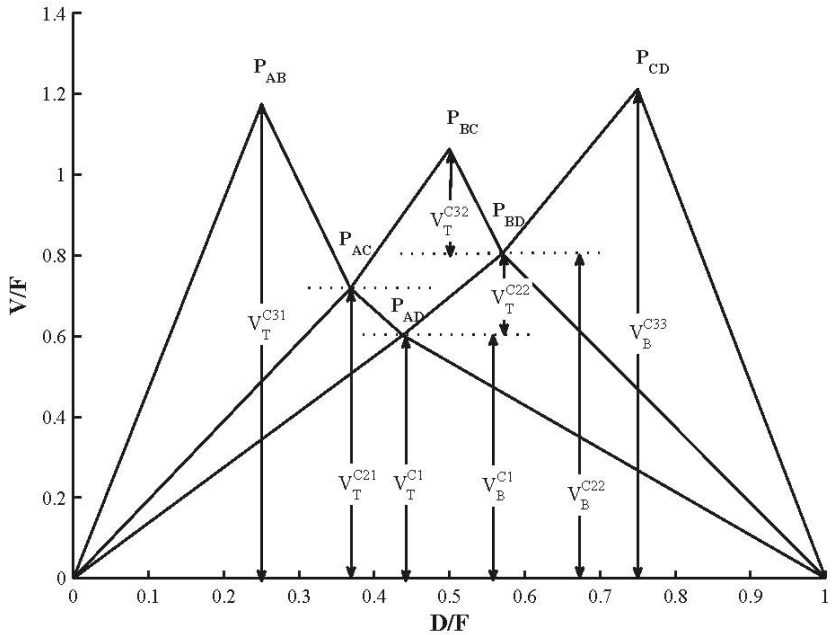

Nominal boilup in subsections

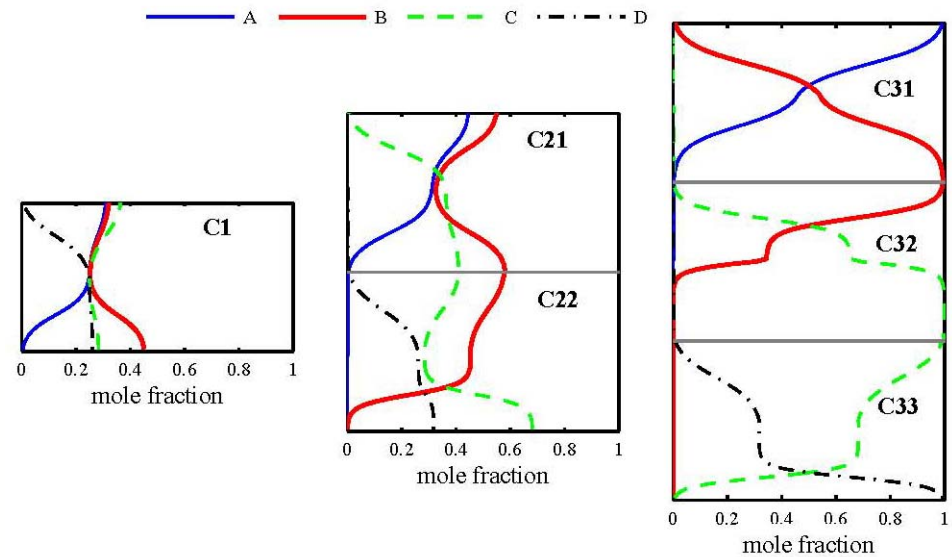

Nominal composition in subsections

Nominal purity of distillate (x_A^D)	99.55 (mol %)
Nominal purity of upper side product (x_B^{S1})	99.33 (mol %)
Nominal purity of lower side product (x_C^{S2})	99.56 (mol %)
Nominal purity of bottom product (x_D^B)	99.62 (mol %)

Control Structures for 4-product Petlyuk Column..

- CS1
  - Basic LV structure in each sub column
  - Boil up is used to control the key impurity in reboiler

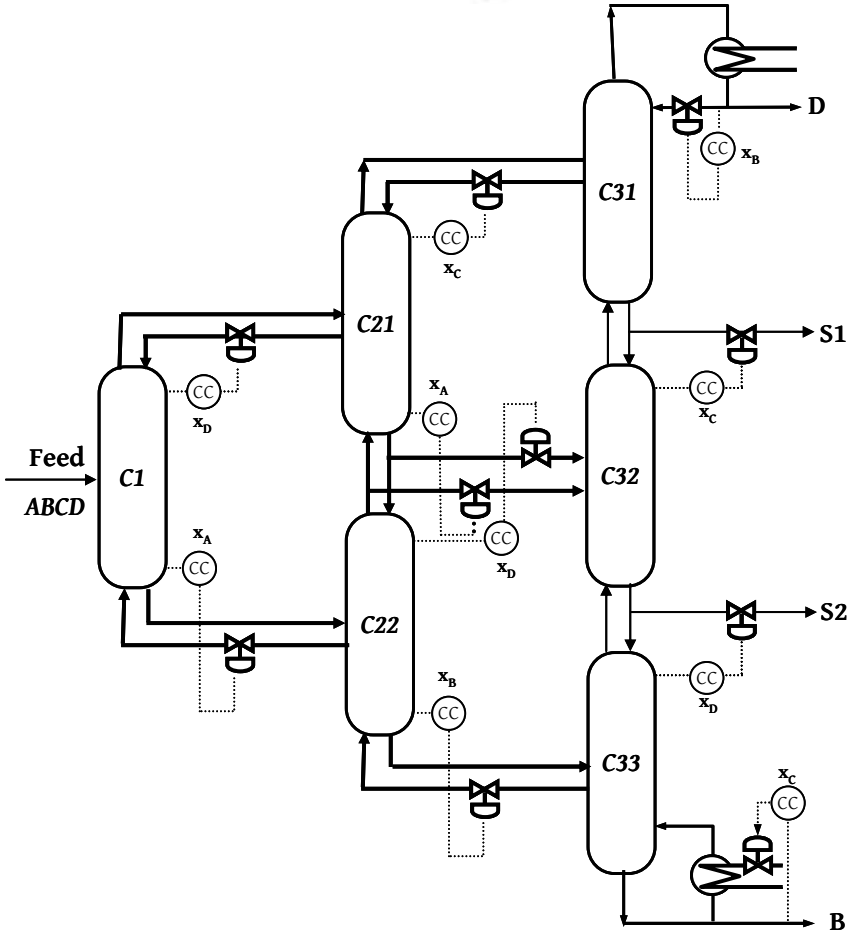

Control Structures for 4-product Petlyuk Column..

- Closed loop simulations from CS1

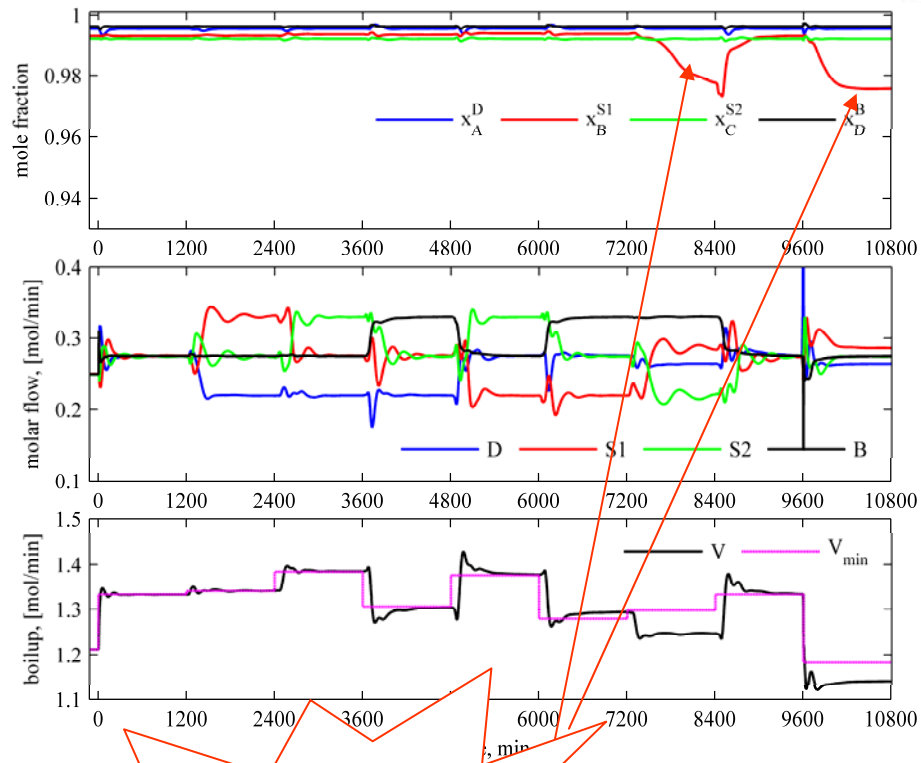

Side impurity increases

NTNU – Trondheim
Norwegian University of
Science and Technology

Control Structures for 4-product Petlyuk Column..

- Why CS1 Failed?

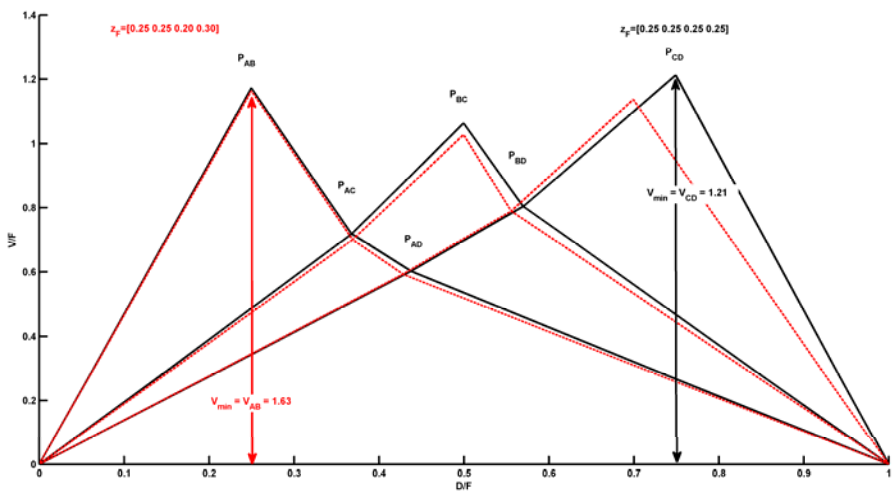

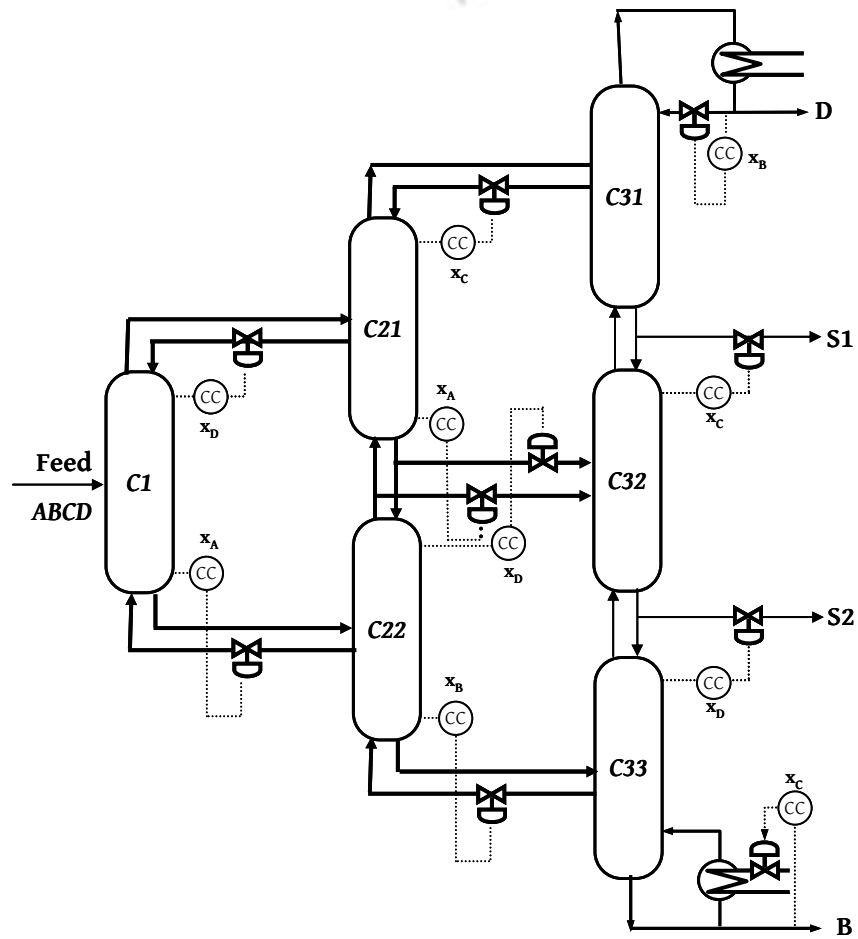

CS1 failed when A/B is the more difficult split

Control Structures for 4-product Petlyuk Column..

- CS2
  - Boilup controls the sum of light key in the products S1, S2 & B (i.e., $x_A^{S1}+x_B^{S2}+X_C^{B}$)

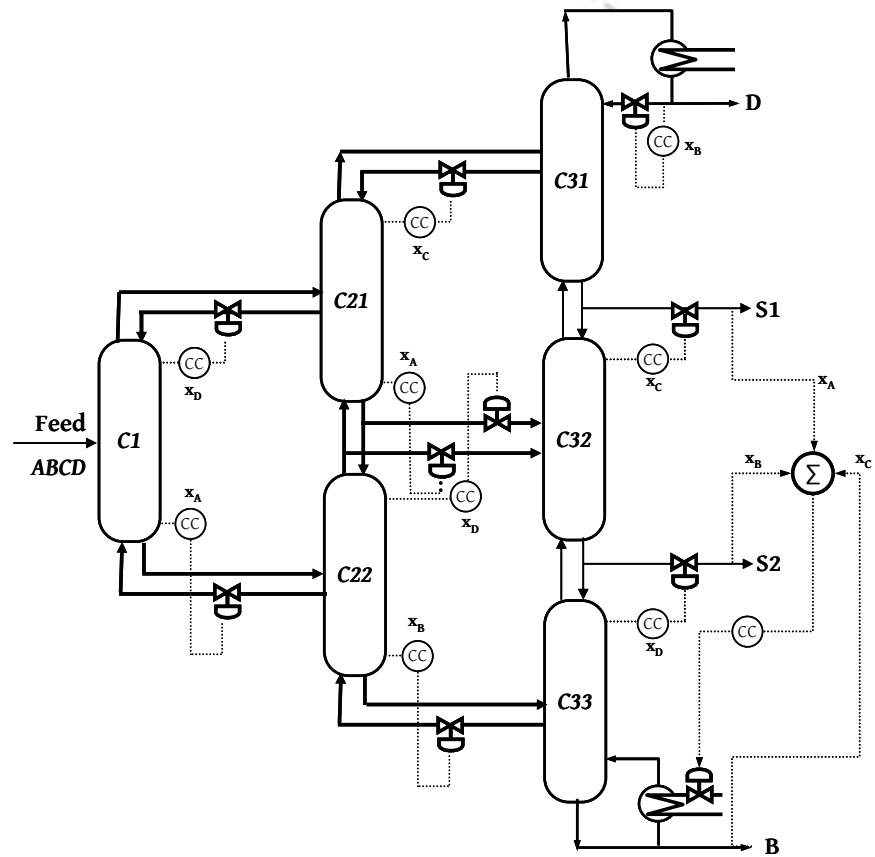

Control Structures for 4-product Petlyuk Column..

- Closed loop simulations from CS2

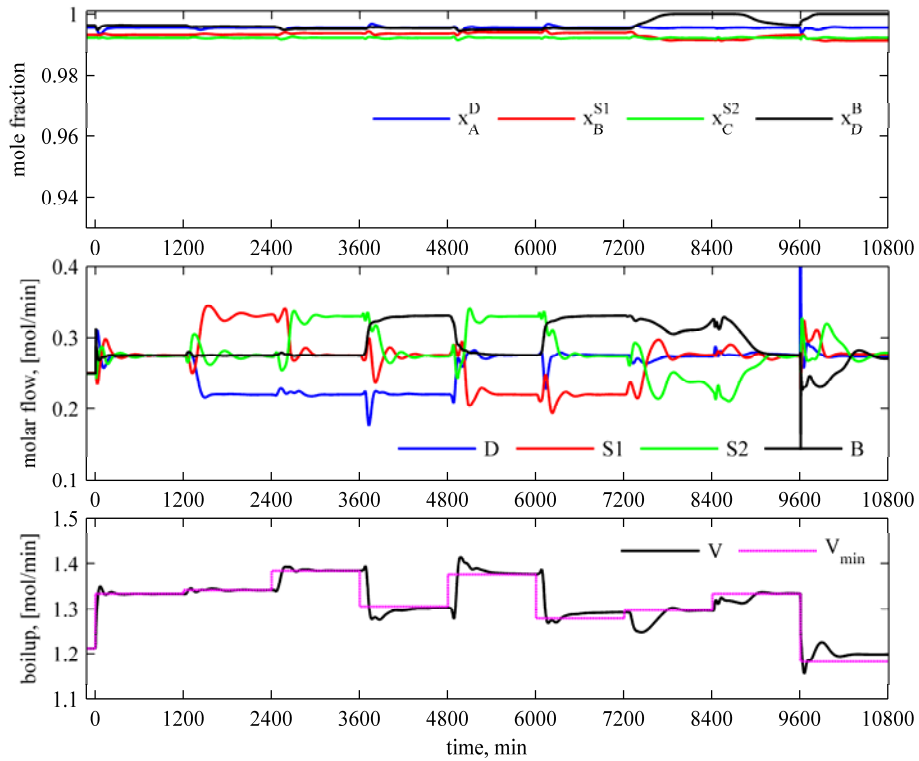

Good performance for feed composition disturbances (and feed rate)

NTNU – Trondheim
Norwegian University of
Science and Technology

Control Structures for 4-product Petlyuk Column..

- CS3
  - controlled variables are a sensitive stage temperature in each sub-column

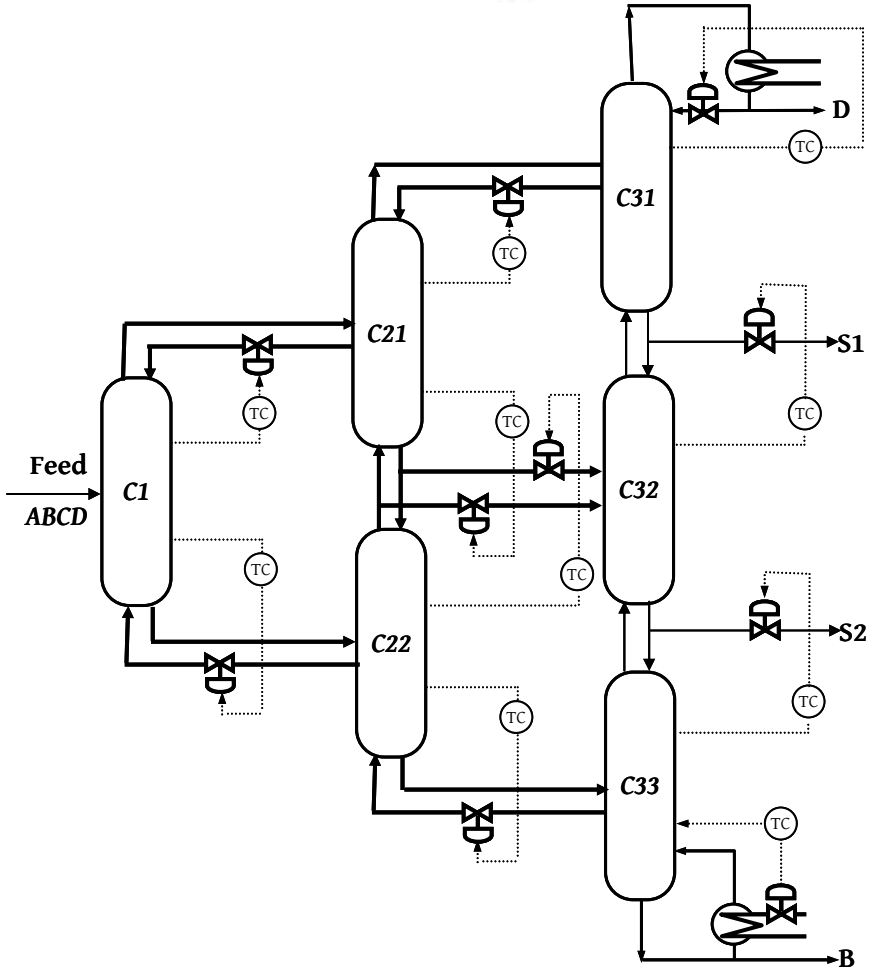

Control Structures for 4-product Petlyuk Column..

- Closed loop simulations from CS3

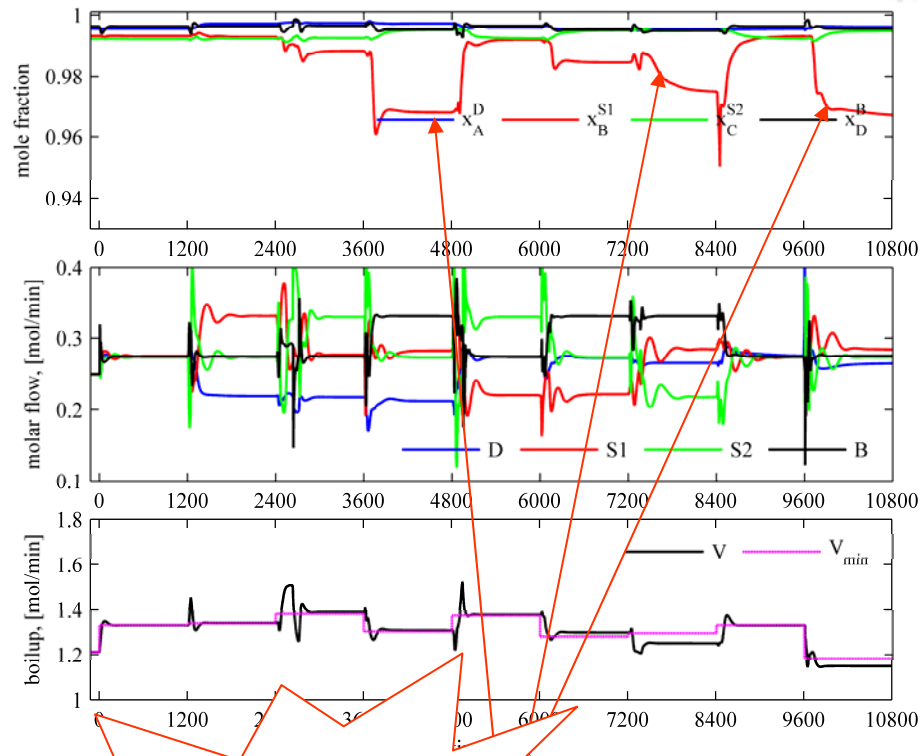

Side impurity increases

NTNU – Trondheim
Norwegian University of Science and Technology

Control Structures for 4-product Petlyuk Column..

- CS4
  - master composition controller sets set point for slave temperature loops
  - Boilup controls the sum of light key in the products S1, S2 & B

    (i.e., $x_A^{S1}+x_B^{S2}+X_C^{B}$)

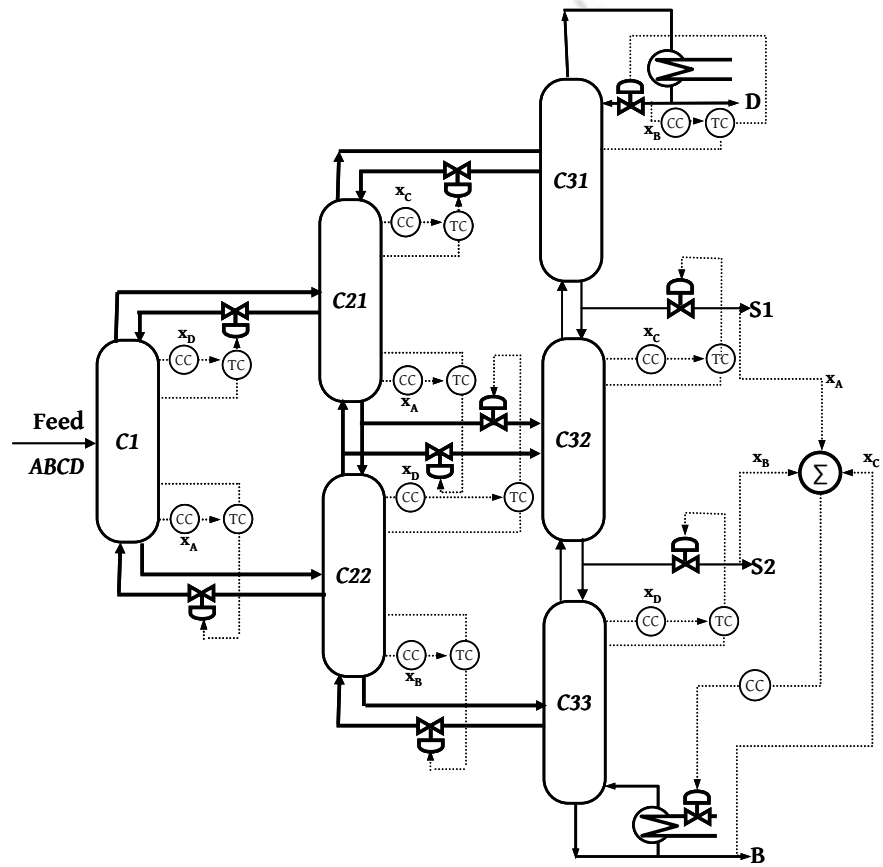

Control Structures for 4-product Petlyuk Column..

- Closed loop simulations from CS4

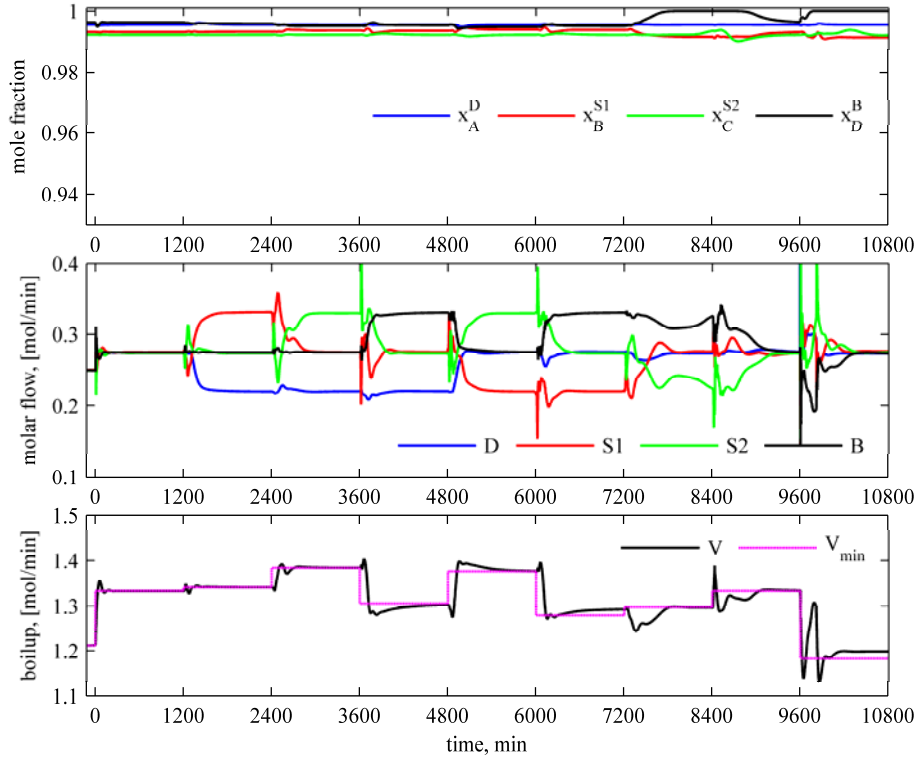

Good performance for feed composition disturbances (and feed rate)

NTNU – Trondheim
Norwegian University of
Science and Technology

Outline

- Introduction & Scope
- Chapter 3: Control structure selection for three-product Petlyuk (dividing-wall) column
- Chapter 4: Steady state and dynamic operation of four-product dividing-wall (Kaibel) columns
- Chapter 5: Active vapor split control for dividing-wall columns
- Chapter 6: Control structure selection for four-product Petlyuk column
- Chapter 7: Conclusions and further work

NTNU – Trondheim
Norwegian University of Science and Technology

Conclusions

- Three-Product Petlyuk Column
  - Single loop decentralized control structure with selector switches may lead to good regulation
- Four-product Kaibel column
  - Experimental verification of 4-point temperature control structure for startup, steady-state and servo-regulatory operation
  - Fitted steady state experimental data with a simple equilibrium based model
- Active Vapour split control
  - Experimentally verified that vapor split valve shall work with feedback loop
- Four-Product Petlyuk Column
  - Single loop decentralized control structure with summation loop leads to good regulation

References

- Dwivedi D., Halvorsen I.J., Skogestad S., Control structure selection for three-product Petlyuk (dividing-wall) column", Accepted for publication in Chemical Engineering and Processing: Process Intensification (2012), doi: "10.1016/j.cep.2012.11.006".
- Wolff, E. A., Skogestad, S., 1995. Operation of integrated three-product (Petlyuk) distillation columns. Industrial & Engineering Chemistry Research 34 (6), 2094–2103
- Anton A. Kiss, Rohit R. Rewagada, Energy efficient control of a BTX dividing-wall column, Computers and Chemical Engineering 35 (2011) 2896– 2904
- Hao Ling, William L. Luyben, Temperature Control of the BTX Divided-Wall Column, Ind. Eng. Chem. Res., Vol. 49, No. 1, 2010
- Dwivedi D., Standberg J., Halvorsen I.J., Skogestad S., Steady state and dynamic operation of four-product dividing-wall (Kaibel) columns: Experimental Verification", Accepted for publications in Industrial & Engineering Chemistry Research (2012), doi: "10.1021/ie301432z".
- Dwivedi D., Standberg J., Halvorsen I.J., Preisig, H.A., Skogestad S., Active vapor split control for dividing-wall columns", Accepted for publication in Industrial & Engineering Chemistry Research (2012), doi: "10.1021/ie3014346"
- Dwivedi D., Halvorsen I.J., Skogestad S., "Control structure selection for four-product Petlyuk column", Accepted for publications in Chemical Engineering and Processing: Process Intensification (2012), doi: "10.1016/j.cep.2012.07.013".

NTNU – Trondheim
Norwegian University of Science and Technology

Further Works

- In Chapter 3 & 6
  - Alternate control structures may be explored
  - Soft sensor approach, instead of direct composition measurements
  - Design of column vs controllability may be studied
  - Multivariable control structures may be explored

- In Chapter 4 & 5
  - Different vapor split valves may be tried
  - Use set up for studying also three product Petlyuk column
  - Larger number of stages may be put in

Thank you very much!!