Preprints of the 18th IFAC World Congress
Milano (Italy) August 28 - September 2, 2011

Coordinated Control Strategy for Microgrid in Grid-Connected and Islanded Operation

Jong-Yul Kim*. June Ho Park**. Heung-Jae Lee***

* New and Renewable Energy System Research Center, Korea Electrotechnology Research Institute, Changwon, Korea (e-mail: jykim@keri.re.kr)
** Electrical Engineering Department, Pusan National University, Busan, Korea (e-mail: parkjh@pusan.ac.kr)
*** Electrical Engineering Department, Kwangwoon University, Seoul, Korea (e-mail: hjlee@kw.ac.kr)

Abstract: As usual, the microgrid operates in grid-connect mode, but, when a fault occurs in the upstream grid, it should disconnect and shift into islanded operation mode. In grid-connect mode, the controlling power at the PCC is necessary management function rather than the frequency and voltage. However, the controlling the frequency and voltage is asked in islanded mode. To achieve these management goals appropriately, the cooperative control strategy among microsources is needed. This supervisory control action is executed at MMS. In this paper, the cooperative control strategy of microgrid components is presented and the management performance is evaluated by using microgrid pilot plant. The pilot plant consists of the PV, PV/Wind Hybrid system, BESS, diesel generators, and RLC loads, which are connected to 380V low voltage lines. The test results show that the proper control strategy can ensure stability of microgrid in islanded mode and maintain the power at the PCC at desired value successfully.

Keywords: Microgrid, Distributed Generation, Coordinated Control, Microgrid Management System.

1. INTRODUCTION

Though the penetration of distributed generations to the electric power system is limited due to the lack of economical benefits, it will be accelerated for various reasons. The increase in DGs (Distributed Generators) penetration depth and the presence of multiple DGs in electrical proximity to one another have brought about the concept of the microgrid [1,2], which is a cluster of interconnected DGs, loads and intermediate energy storage systems. As usual, the microgrid operates in grid-connect mode, but, when a fault occurs in the upstream grid, it should disconnect and shift into islanded operation mode [3]. In grid-connect mode, the frequency of the microgrid is maintained within a tight range by the main grid. Therefore, the controlling power at the PCC (Point of Common Coupling) is necessary management function rather than the frequency and voltage. In an islanded operation, however, which has relatively few microsources, the local frequency control of the microgrid is not straightforward. During a disturbance, the frequency of the microgrid may change rapidly due to the low inertia present in the microgrid. Therefore, local frequency control is one of the main issues in islanded operation [4]. To achieve the management goals in two different operation modes, the cooperative control strategy of all components is needed. Many related technologies on operation of microgrid such as management, control, protection, power quality, pilot plants, and field tests have been studied. Energy management and power control for microgrid have been studied [5,6]. Development of pilot plants for microgrid and field tests have been performed for frequency and voltage control algorithms, and for utility inter-connection devices [7,8]. In this paper, the cooperative control strategy of microgrid components is presented and evaluated performance of management functions by a hardware test using pilot plant.

2. BACKGROUND OF MICROGRID

A microgrid is a cluster of interconnected micro sources that are referred to as distributed generators, loads and intermediate energy storage systems that co-operate with each other to be collectively treated by the grid as a controlled load or generator. This microgrid is connected to the grid at the PCC, and operates in parallel with a utility grid under normal situations. The microgrid disconnects from the utility grid, however, and transfers into islanded operation mode when a fault occurs in the upstream grid. The microgrid has a hierarchical control structure as shown in Fig. 1.

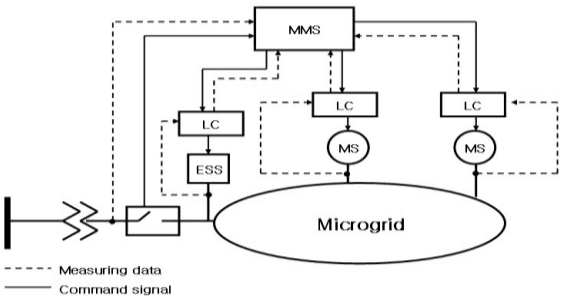

Fig. 1. The hierarchical control structure of microgrid.

It has two control layers: MMS (Microgrid Management System) and LC (Local Controller). The MMS is a centralized controller that deals with management functions

such as disconnection and re-synchronization of the microgrid and the load shedding process. In addition to this function, the MMS is responsible for the supervisory control of micro sources and the energy storage system. Using collected local information, the MMS generates a power output set point and provides it to the LCs. An LC is a local controller that is located at each microsource (MS) and controls the power output according to the power output set from the MMS [9].

3. STUDY SYSTEM CONFIGURATION

In Fig. 2 presents the configuration of the studied microgrid pilot plant system which has been constructed in Korea Electro-technology Research Institute (KERI). The microgrid system is composed of a 380V, one-feeder distribution subsystem which is connected to a 22.9kV distribution network through a 100kVA pole transformer. The system includes a PV, H/B (PV and WT hybrid) system, two diesel generators, battery energy storage system (BESS), static transfer switch (STS), and three loads. The 10kW PV system is not a real PV generation system but a simulator which mimics the real PV generation system. The 20kW hybrid system is composed of a wind turbine simulator (10kW), a real PV array (10kW), a common dc bus, and a grid-interface inverter (20kW). The BESS is connected to 380V busbar which is near the PCC to be utilized when the system transit to islanded operation mode. The system also includes two diesel generators, i.e., 50kW and 20kW diesel generators on the feeder. The STS is also connected to 380V busbar to disconnect microgrid from utility grid when the fault occurs.

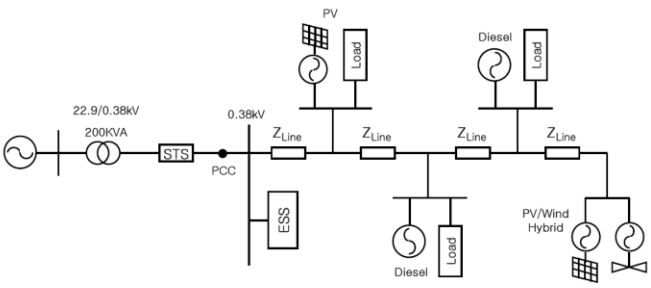

Fig. 2. Configuration of the studied microgrid.

4. COORDINATED CONTROL STRATEGY

4.1 Grid-Connected Mode

In grid-connected mode, the microgrid is considered as a dispatchable aggregated generating plant or load by system operator. The system operator can asks microgrid to control the power at the PCC as a certain constant level for peak shaving at peak time or solving congestion of distribution network. Therefore, the controlling the power at the PCC is needed rather than frequency and voltage control. For controlling the power flow at the PCC, MMS should control the power output of microsources but RES cooperatively as shown in Fig. 3. The MMS can receive the information about system states by communication. The closed loop control issues power output set-point over the communication channel to each microsource. The LCs ultimately are responsible for regulating the power locally in each component. The constant power control algorithm in MMS compares the measured power in PCC (Ppcc and Qpcc) and the reference value (Pref and Qref) to obtain the error. This error generates the total required power (Total P Command and Total Q Command) as shown in Fig. 4. And then, generated commands are applied to the dispatch function for generating a power output set-point for each individual controllable MS. The final active power output set-point of the ith MS (Pref_i and Qref_i) is determined by the summation of the current power output value (Pout_i and Qout_i) and change of the power output set-point (Pref_i and Qref_i) as shown in Fig. 5. The participation factor (pf_Pi and pf_Qi) of *i*th MS is a pre-determined constant value and it is decided by the capacity of the MS. This constant power control algorithm is executed every second by the MMS.

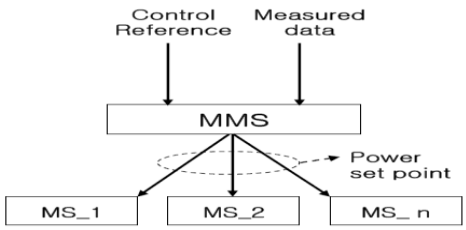

Fig. 3. Coordinated control strategy in grid-connected mode.

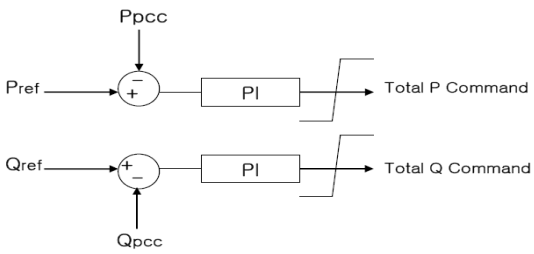

Fig. 4. Power command generation in grid-connected mode.

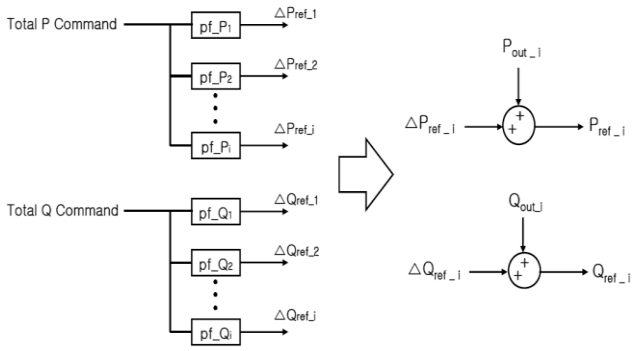

Fig. 5. Microsource power output set-point calculation.

4.2 Islanded Mode

When the fault occurs, MMS should detect the event as soon as possible and disconnect the microgrid from the upstream grid. In grid-connect operations, all of the micro sources and ESS adopt the fixed power control mode. Since the fixed power control of ESS supplies constant power, it cannot provide proper frequency and voltage controlling ability in

islanded operation. Therefore, the control scheme of the ESS has to be switched from fixed power control to frequency/voltage control during islanded operation. Fig. 6 shows the configuration of the ESS and its local controllers. The ESS is made up of energy storage device and grid-interfacing power conditioning system (PCS). The controller consists of upper grid operation controller and a d-q frame based lower current controller [10]. In grid-connect operation, the upper controller regulates the active and the reactive power injected into the grid and outputs the d- and q- axis current commands, Id_ref and Iq_ref. Otherwise, in islanded operation, the upper grid operation controller regulates the frequency and the voltage of microgrid, and also outputs the d- and q- axis current commands as shown in Fig. 7. In a current controller, d- and q-axis reference voltage is generated using errors between dq current reference and measured d-q current. The generated d-q reference voltage is transformed into the a-, b-, and c- axis reference voltage by the d-q to abc transformation block. The phase-lock-loop (PLL) block generates a signal synchronized in phase to the converter input voltage to provide the reference phase angle for the rotational inverse d-q transformation. In the PWM block, the desired voltage waves and the triangular carrier signal are compared at cross-over points and create turn-on and turn-off switching signals for the six IGBTs.

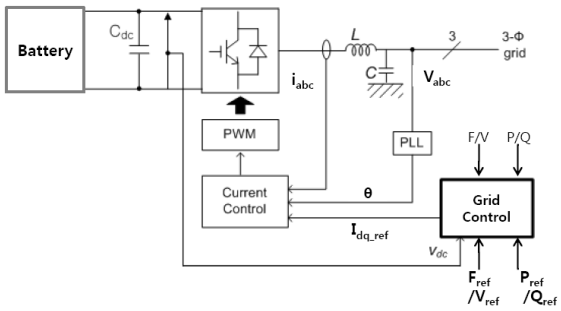

Fig. 6. Configuration of the ESS.

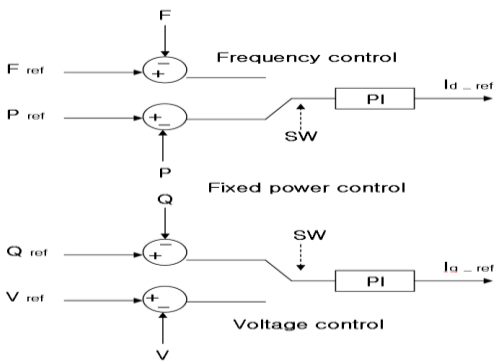

Fig. 7. Control scheme of the ESS.

Though the frequency and the voltage of microgrid in islanded operation can be effectively controlled by applying an F/V control scheme in the ESS, the control capability of the ESS may be limited by its available energy storage capacity. Therefore, the power output of the ESS should be brought back to zero as soon as possible. The secondary regulation control is in charge of returning the current power output of the ESS to the pre-planned value, which is usually set at zero as shown in Fig. 8.

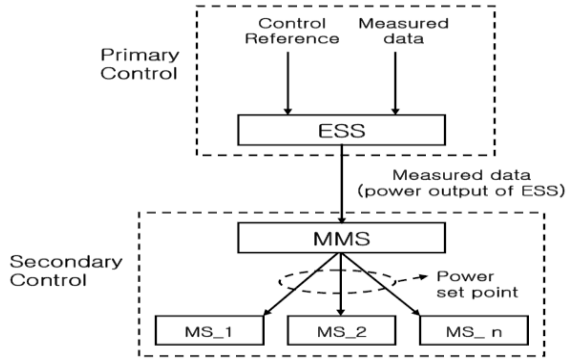

Fig. 8. Coordinated control strategy in islanded mode.

The secondary control algorithm in MMS compares the measured power output of ESS (Pess and Qess) and the reference value (Pess_ref and Qess_ref) to obtain the error. This error generates the total required power (Total P Command and Total Q Command) as shown in Fig. 9. And generated commands are dispatched to each microsource as shown in Fig. 5. This control algorithm is also executed every second by the MMS.

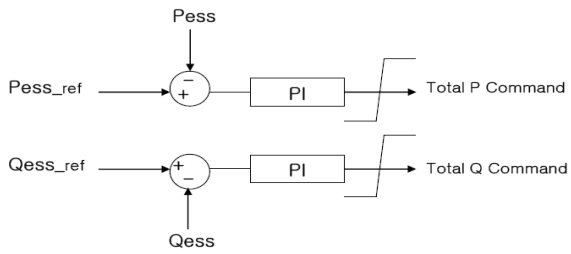

Fig. 9. Power command generation in islanded mode.

5. SIMULATION STUDY

A simulation platform under the PSCAD/EMTDC environment was developed to evaluate the dynamic behavior of the microgrid. In the PSCAD/EMTDC model, the RES and the BESS are modeled as an equivalent current source model for analysis convenience. A typical synchronous generator model in the PSCAD/EMTDC library is used to represent the diesel generators. The upstream grid is modeled by an equivalent voltage source with thevenin impedance, and the load and line impedance are represented by constant impedance models, R and X.

A. Grid-Connected Mode

The constant power control in grid-connected mode is tested under the condition of continuously varying loads and power outputs of RES. The loads and power outputs of the RES change as shown in Fig. 10 and Fig. 11. In this case, initial reference values of power at the PCC set to be 10kW+j0kVar and then it changes to -10kW+j0kVar at t=40sec. The power outputs of the diesel generators are changed for controlling the power at the PCC at the reference values as shown in Fig 11. As a result of this regulating action of MMS, the average

of power at the PCC is regulated in accordance with the reference values as shown Fig. 12.

B. Islanded Mode

We evaluate the islanded operation performance of the microgrid under the condition of continuously varying loads and power outputs of RES. The islanding occurs at t=0s and loads and power output of the RES change as shown in Fig. 13 and Fig. 14. According to the loads and power outputs of the RES change, the BESS injects or absorbs the power from the microgrid to regulate the frequency and the voltage. Then, the secondary control detects the changing in the power output of the BESS and assigns the new power output set-points to the two diesel generators as shown in Fig. 14. Through the cooperative control strategy, the microgrid can be operated in stable during islanded operation as shown in Fig. 15.

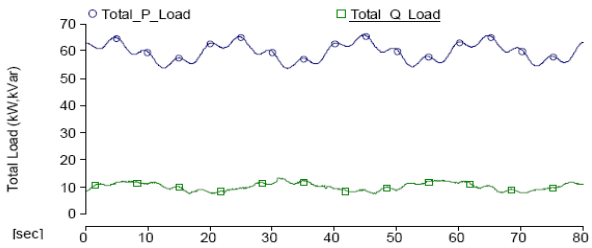

Fig. 10. Load in grid-connected mode.

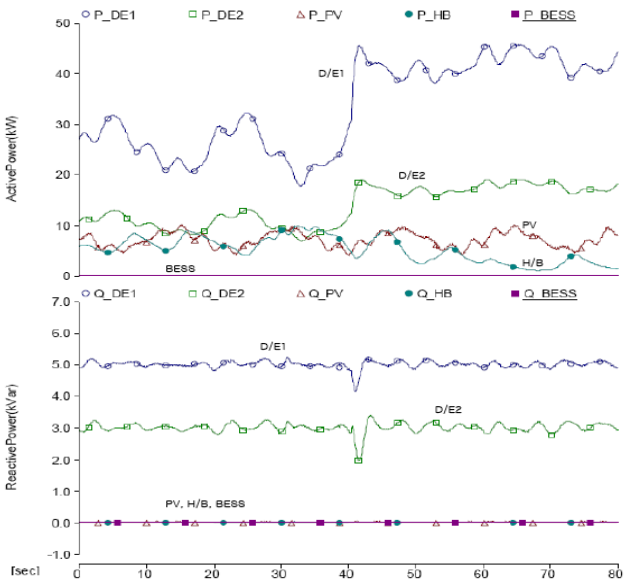

Fig. 11. Power outputs of ESS and microsources in grid-connected mode.

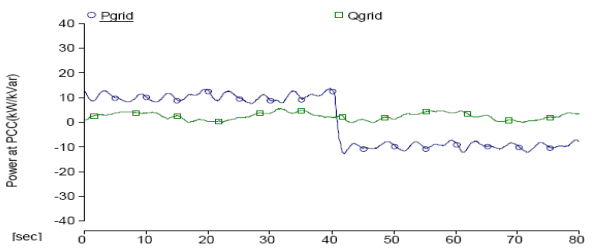

Fig. 12. Controlled power at the PCC in grid-connected mode.

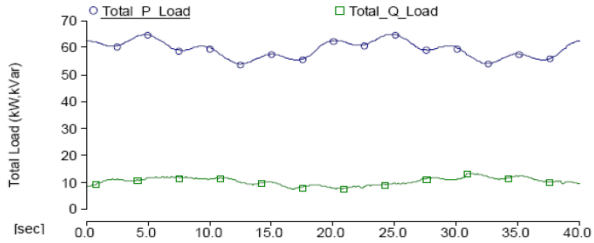

Fig. 13. Load in islanded mode.

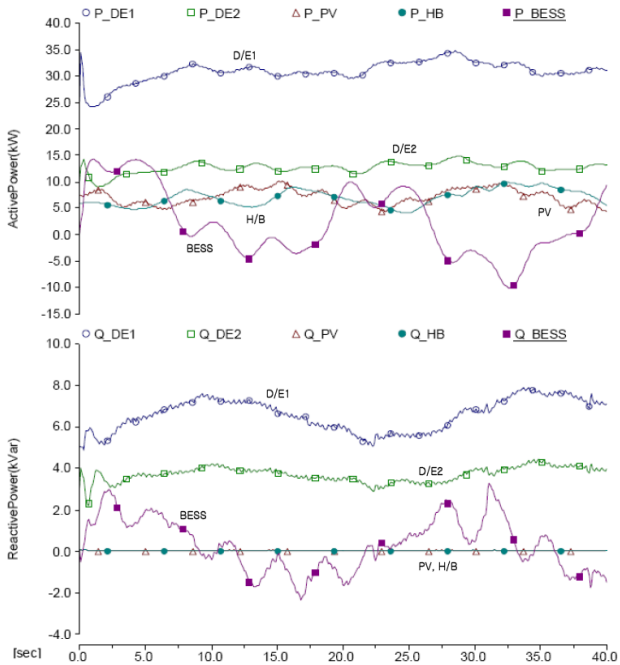

Fig. 14. Power outputs of ESS and microsources in islanded mode.

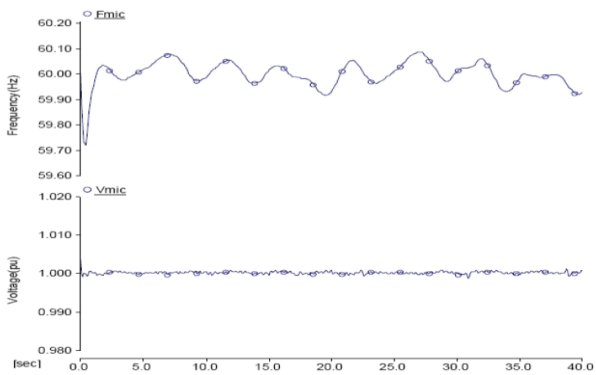

Fig. 15. Frequency and voltage in islanded mode.

6. EXPERIMENT

6.1 Feature of KERI Microgrid Pilot Plant

Fig. 16 shows feature of each components in microgrid pilot plant. All components are installed and being operated now. Fig. 17 shows the developed prototype MMS. It is PC-based equipment and designed for management of small scale microgrid pilot plan. It controls microgrid components by RS-485 serial communication methods.

Fig. 16. Feature of the components in microgrid pilot plant.

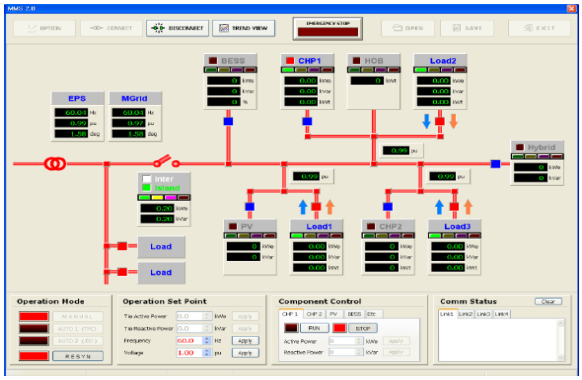

Fig. 17. Feature of developed MMS.

6.2 Experimental Results

The performance of microgrid management functions are evaluated by hardware test using pilot plant. The dynamic behaviours of the microgrid with two different operating modes are tested. During the test period, the load and power outputs of PV and H/B are varying in accordance with the time as shown in Fig. 18 and Fig. 19.

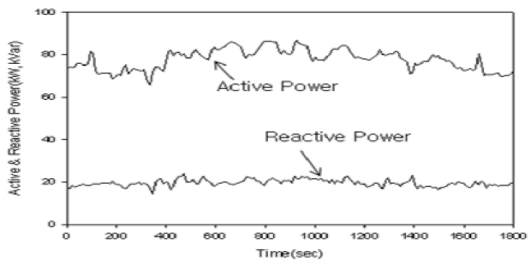

Fig. 18. Load fluctuation during test period.

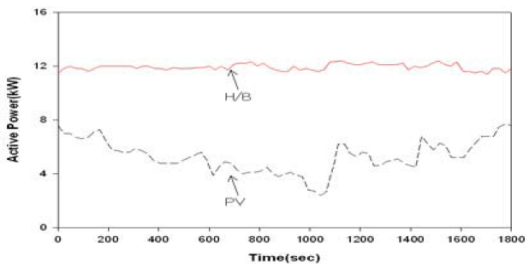

Fig. 19. Power outputs of H/B and PV.

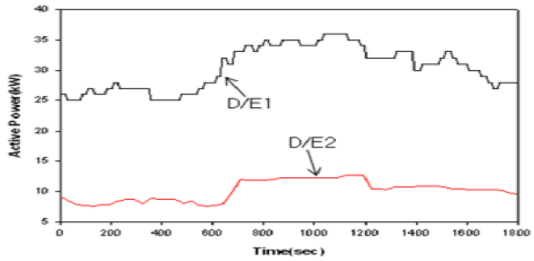

Fig. 20. Active power outputs of diesel generators.

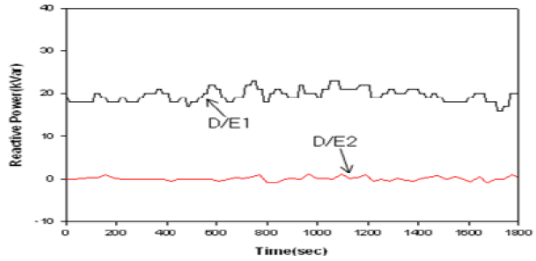

Fig. 21. Reactive power outputs of diesel generators.

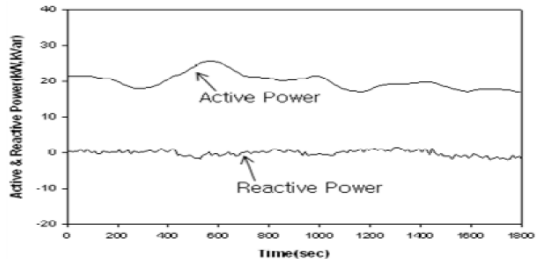

Fig. 22. Controlled power at the PCC.

A. Grid-Connected Mode

In this operating mode, the power at the PCC is controlled. In this case, the reference values of power at the PCC set to be 20kW+j0kVar. The control action of MMS tries to make the power at the PCC be a 20kW+j0kVar by controlling the diesel generators as shown in Fig 20 and Fig. 21. As a result of this regulating action of MMS, the average of power at the PCC is regulated in accordance with the reference values as shown Fig. 22. The test results show that microgrid can acts as an aggregated constant load or generator.

B. Islanded Mode

After islanding, the control scheme of BESS shifts to Frequency/Voltage control. As a result of the fast control acting of BESS, the frequency of the microgrid maintains within the range from 59.8Hz to 60.2Hz and the voltage also can be regulated from 0.9pu to 1.1pu during islanded operation as shown in Fig. 23 and Fig. 24. The power output of BESS changes from zero to a certain value to control the frequency and the voltage, and it is returned to zero due to secondary regulation control as shown in Fig. 25. During islanded operation, the power outputs of diesel engine generators are also changed from an initial constant value to a new set point as shown in Fig. 26 and Fig. 27.

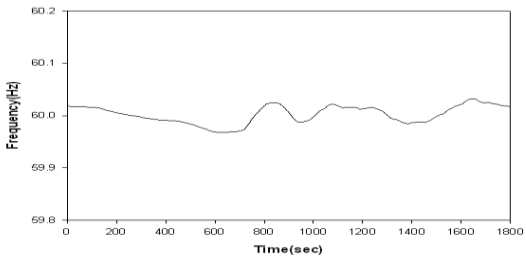

Fig. 23. Frequency of microgrid.

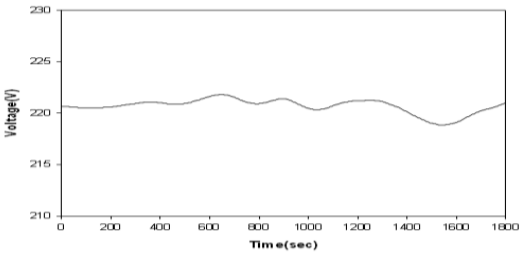

Fig. 24. Voltage of microgrid.

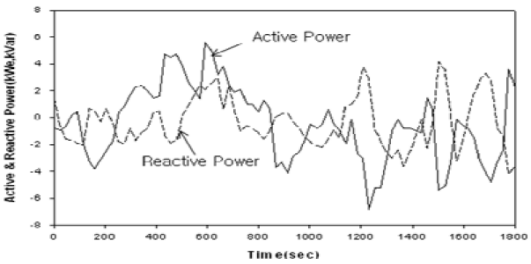

Fig. 25. Power output of BESS.

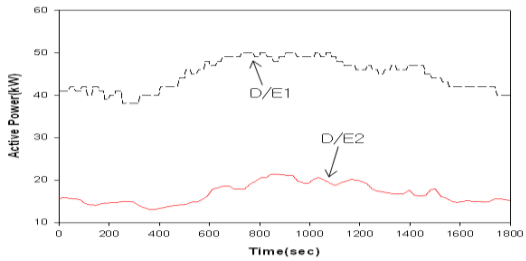

Fig. 26. Active power outputs of diesel generators.

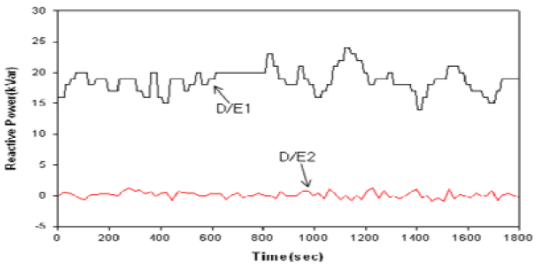

Fig. 27. Reactive power outputs of diesel generators.

7. CONCLUSIONS

In this paper, the management functions of MMS in microgrid are presented and evaluated by a hardware test using microgrid pilot plant. In grid-connected mode, the power at the PCC is regulated at certain constant level by control algorithm of MMS. The test results show that microgrid can acts as an aggregated constant load or generator. This means that the distribution operator can utilize the microgrid to achieve the effective system operation goals. In islanded mode, the ESS, which has a relatively fast response time, plays a primary control role. The test results indicate that the ESS can handle the frequency and the voltage very well. The control capability of the ESS may be limited, however, by its available energy storage capacity. Therefore, power output of ESS should be brought back to zero as soon as possible. The results show that the proposed coordinated control scheme can regulate the frequency and voltage and reduce the consumption of the stored energy of ESS.

ACKNOWLEDGMENT

This work was supported by the International Cooperation of the Korea Institute of Energy Technology Evaluation and Planning (KETEP) grant funded by the Korea government Ministry of Knowledge Economy

REFERENCES

[1] Hatziargyriou, N., Asano, H., Iravani, R. and Marnay, C., “Microgrids”, IEEE Power Energy, Vol. 5, No. 4, pp.78-94, July-Aug. 2007

[2] N. D. Hatziargyriou, “Microgrids”, IEEE Power Energy, Vol. 6, No. 3, pp.26-29 , May-June 2008.

[3] A. Tsikalakis and N. Hatzargyriou, “Centralized control for optimizing microgrids operation”, IEEE Trans. Energy conversion, Vol. 23, No. 1, pp. 241-248, March 2008.

[4] EU Microgrid Project, “Microgrids large scale integration of micro-generation to low voltage grids”, ENK-5-CT-2002-00610, 2004.

[5] F. Katiraei, R. Iravani, N. Hatziargyriou, and A. Dimeas, “Microgrids management-controls and operation aspects of microgrids”, IEEE Power Energy, Vol. 6, No. 3, pp.54-65, May-June 2008.

[6] R. Majumder, A. Ghosh, G. Ledwich, and F. Zare, “Power management and power flow control with back-to-back converters in a utility connected microgrid”, IEEE Trans. Power Syst., Vol. 25, No. 2, pp.821-834, May 2010.

[7] J. Stevens, H. Vollkommer, and D. Klapp, “CERTS microgrid system tests”, IEEE Power Engineering Society General Meeting 2007, pp. 1-4, June 2007.

[8] Marnay, C., Venkataramanan, G., Stadler, M., Siddiqui, A. S., Firestone, R. and Chandran, B., “Optimal technology selection and operation of commercial-building microgrids”, IEEE Trans. Power Syst., Volume 23, No. 3, pp.975-982, Aug. 2008.

[9] J. A. Pecas Lopes, C.L. Moreira, and A.G. Madureira, “Defining control strategies for microgrids islanded operation”, IEEE Trans. Power Systems, Vol. 21 , No.2, pp. 916-924, May 2006.

[10] A. Timbus, M. Liserre, R. Teodorescu, P. Rodriguez, and F. Blaabjerg, “Evaluation of current controllers for distributed power generation systems”, IEEE Trans. Power Electron., Vol. 24, No. 3, pp. 654-664, March 2009.