Hydrogenation of CO Over a Cobalt/Cerium Oxide Catalyst for Production of Lower Olefins
Proceedings of European Congress of Chemical Engineering (ECCE-6)
Copenhagen, 16-20 September 2007

Hydrogenation of CO Over a Cobalt/Cerium Oxide Catalyst for Production of Lower Olefins

M. Haghshenas Fard[a], L. Maleki[b], M. Khoshnoodi[b] , F. Banitaba[b]

a. Department of Chemical Engineering, Islamic Azad University, Shahreza branch, Isfahan, Iran
b. Department of Chemical Engineering, University of Sistan Baluchestan, Zahedan, Iran

Abstract
A cobalt/ceria catalyst has been found to be receptive for production of lower olefins from synthesis gas by Fischer Tropsch synthesis, and shows high activity for bodouard reaction. The catalyst prepared in various ageing times (the time that precipitated remains in contact with the precipitating medium) resulted in a change in CO conversion and olefin selectivity. Catalysts were prepared in a 0 and 165 minute ageing time. These catalysts were tested at various temperatures and pressures in a stainless steel micro reactor. It was found that a catalyst with 165 minute ageing time was highly receptive to ethylene and methane.

Keywords– Fischer Tropsch**,** olefins, synthesis gas, cobalt catalyst

1. Introduction

In 1929, Fischer and Tropsch discovered that the reaction between carbon monoxide and hydrogen (synthesis gas) yields mixtures of alkanes and alkenes. Since 1955, the same production method has been carried out in the Republic of South Africa [1]. However, today, as a result of the changing economic and political condition, work has been aimed at producing small molecule olefins such as ethylene and propylene using F-T synthesis. For this aim, extensive work has been done, and these studies are still continuing. Process variables such as temperature, pressure, space velocity, CO/H_2 ratio and ageing time parameters are known to affect product distribution.

The aim of this study was to investigate the role of ageing time in product selectivity and to evaluate the catalyst performance under the various process conditions. The parameter of ageing time has been investigated in other works [2-3] and is a new idea in this paper.

It is unnecessary to emphasize the importance of the catalysts in Fischer Tropsch synthesis. F-T catalysts have, as their basic constituents, the group VIII metals of the periodic table, especially iron, cobalt, nickel and ruthenium. Iron and cobalt are readily available. The main reaction for the production of hydrocarbons is

$$nCO + mH_2 \leftrightarrow C_nH_{2(m-n)} + nH_2O \quad (1)$$

Reactions such as cracking, isomerisation and hydrocracking can be minimized on basic supports, but with the formation of light olefins being associated with the high activity of a bodouard reaction [3], the side reactions are proceeded almost exclusively by

$$CO + H_2 \leftrightarrow CO_2 + H_2O \qquad \text{and} \qquad 2CO \leftrightarrow CO_2 + C \tag{2}$$

The first reaction is a water gas shift and the second, a bodouard reaction that produces carbon bulk in the catalyst bed of the reactor. With increased temperature, these reactions are more active. It is understood that cobalt-based catalysts exhibit low water-gas shift activity [4], but previous studies of the FT reaction over supported cobalt on commercial available basic oxides such as cerium oxide and few clear advantages are seen in using this type of support [5-6].

2. Experimental

a) Catalyst preparation

All catalyst precursors were prepared using the coprecipitation procedure. Aqueous solutions of cobalt nitrate and cerium nitrate (0.25mol/lit) were premixed and the resulting solution was heated to 80°C. Aqueous sodium carbonate (0.25mol/lit) was added to the mixed nitrate solution, which was continuously stirred at 150 rpm, whilst the temperature was maintained at 80°C until pH between 8 and 8.3 was achieved. This procedure took approximately 10 to 15 minutes to complete. The resulting precipitate was then filtered and washed several times with hot and cold distilled water until the observed sodium content by atomic absorption was less than approximately 150 ppm. The precipitate was dried at 120°C for 16 hrs to give a material denoted as the catalyst precursor, which was then calcined (550°C, 6 hrs) to give the final catalyst.

In pH=7, small particles with a large surface area were prepared [6]. The calcined catalyst contained 11wt% cobalt. Catalysts were reduced in the reactor with hydrogen (99.99%) at 350°C, 1atm, 4hrs. The catalyst was prepared in two samples. Sample A with 0 and sample B with a 165 minute ageing time.

b) Catalyst testing

The reaction equipment used was a fixed bed microreactor, which allows for working up to 50 bar and 600°C. The microreactor is an isothermal fixed bed of 10 mm internal diameter, 300 mm length, and a volume of catalyst up to 5 cm^3. It is located on the inside of a stainless steel chamber, which is heated by an electric resistance. The temperature on the bed and on the reactor wall is controlled by means of an Atbin temperature controller. The flow rate of H_2, CO and Argon are controlled by Fisher mass flowmeters. The reaction mixture is passed through several purifiers with the aim of eliminating possible traces of oxygen and water that may deactivate the catalyst. The experimental unit has been shown in Fig. 1.

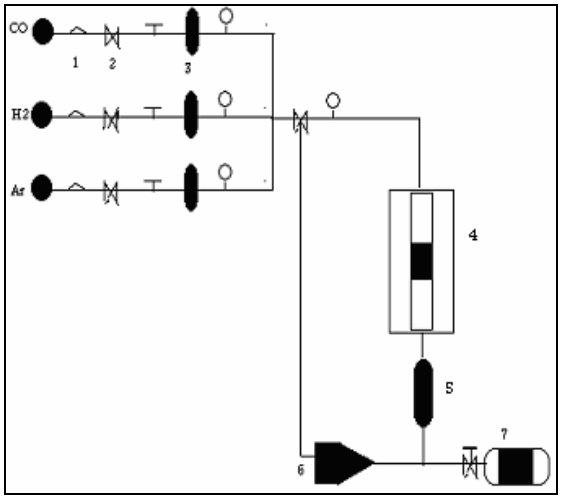

Fig. 1. Experimental unit for the test of catalysts

1. Regulator, 2.Valve, 3. Flow meter, 4. Furnace and microreactor, 5. Condenser, 6. Trap, 7. GC

One gr of catalyst was transferred into the microreactor. Glass wool supported the catalyst and prevented loss of the fine particles. After controlling temperature, pressure and flow rate, feed gas passes through the microreactor. Cooling the reactor was not necessary due to its large surface-to-volume ratio and of the catalyst (1 gr). The temperature was monitored by axially movable thermocouples over the whole reactor length.

Argon was used as an internal standard because its role is to control the temperature in the reactor and doesn't enter in the reactions. The reaction was carried out at various temperatures, pressure, H_2/CO ratio and space velocity after a slow start-up procedure. Sample analysis was carried out approximately every 2-3 hrs for a period of 30 hrs on stream. Gaseous effluent from the reactor, consisting of lower hydrocarbons, CO, and CO_2 as well as the feed gas, was analyzed by on-line gas chromatography (Varian 3400,column: Propak N, L=2m, 1/8" stainless steel T=110°C) with a thermal conductivity detector (TCD) and flame ionization detector (FID). The liquid products were collected by a trap after the microreactor and not separated by the Propak column. CO conversion has been monitored by calibrating the chromatographic signal obtained for different concentrations of CO in feed. Gas space velocity (GHSV), %conversion and selectivity of products are given by

$$GHSV = \frac{\left(\frac{ml}{hr}\right)_{feed}}{ml_{catalyst}}, \quad \%Conversion = \frac{CO_0 - CO}{CO_0} * 100, \quad \%Selectivity = \left(\frac{C_P}{CO_0 - CO}\right) * 100$$

In this equation, CO_0 is the initial concentration of carbon monoxide, CO is the final concentration of carbon monoxide and C_P is concentration of the product.

3. Results and Discussion

The performance of the catalysts in the screening microreactor at various temperatures, pressure and space velocity (GHSV) is summarized in Table 1. In reactions lasting 24 and 48 hrs, the activity of this catalyst appeared to stabilize after 4 hrs on stream and showed very little change thereafter.

Table 1. Result of 0 and 165 min age Co/CeO_2 catalyst

%Selectivity					%Conv.	H_2/CO	GHSV hr^{-1}	P atm	T°C	Ageing time min
C_4H_{10}	C_3H_6	C_2H_4	C_2H_6	CH_4						
-	-	0.1	-	-	40	1	3600	1	350	0
-	0.1	0.6	-	0.1	31	1	3600	1	400	
-	1.6	4	-	4	21	1	3600	1	450	
0.3	1.9	4.5	-	3.5	19	1	7200	1	450	
-	0.6	0.9	0.3	4	30	1	7200	5	450	
-	-	0.5	-	1.3	50	1	3600	1	350	165
-	0.7	1.8	-	1.5	38	1	3600	1	400	
0.1	0.7	44	-	48	17	1	3600	1	450	
-	0.5	2	0.3	4	40	2	3600	1	450	

These catalysts showed high methane and high alkenes content in ethylene fractions. The water gas shift reaction has low activity in cobalt catalysts, but the bodouard reaction ($2CO \leftrightarrow CO_2 + C$) has a high activity and leads to production and deposition of carbon bulk in the bed of the microreactor [7-8]. Deposition of carbon may lead to excessive methane formation, catalyst deactivation and destruction of catalyst pellets. Carbon deposition via the bodouard reaction is favored over the formation of olefins [9].

a) Effects of space velocity

As space velocity increased, the effective conversion decreased and the olefin selectivity in the C_2 and C_3 fraction increased. In this case, the hydrogenation of primary products, olefins were somewhat inhibited and the selectivity of olefins increased. An increase in olefin selectivity with increasing space velocity was reported in a study by Dictor and Bell [10].

b) Effect of temperature

The elevation of the reaction temperature increased the activities of the catalysts. Figure 2 showed the effect of temperature on ethylene and propylene selectivity for unages catalysts. In sample B, the bodouard reaction is very active and this tendency increases with increasing temperature. The results showed a marked decreased conversion% and increase of gas phase selectivity with increased temperature for both samples. At the conversion of 17% for sample B, selectivity of ethylene and methane were 44% and 48%, respectively. In this sample, with decreased temperature, %conversion reached 50%, and ethylene selectivity reached 0.5%. Sample A showed that an increase in temperature leads to an increase in olefins selectivity

and a decrease in conversion percentage. An increase in olefin selectivity with increasing temperature was reported [11].

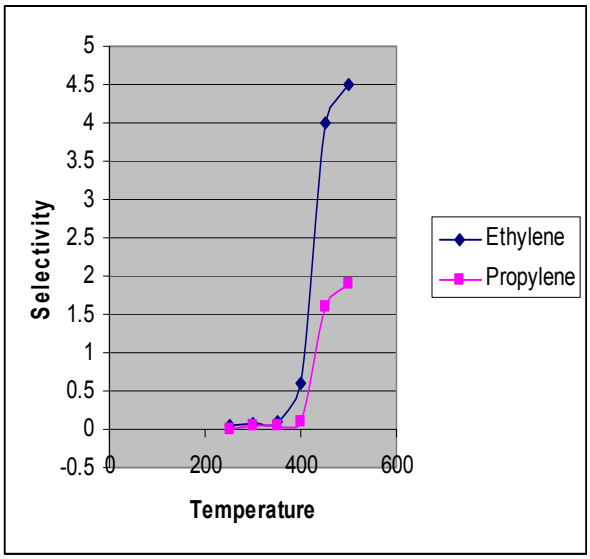

Fig. 2. Effect of temperature on selectivity

c) Effect of pressure

Heavy hydrocarbon selectivity increases at high pressure, because the hydrogenation and cyclic reactions proceed at higher rates. When the reaction pressure was elevated from 1atm to 5 atm at a constant temperature, the conversion of CO rose from 21% to 40% and selectivity of ethylene decreased.

d) Effect of H_2/CO ratio

For this catalyst, total olefins selectivity decreases with an increase in H_2/CO because of the increase in the rate of olefins hydrogenation to heavy hydrocarbons [12]. The increase of the CO amount in the synthesis gas $\left(\frac{H_2}{CO} \prec 1\right)$ lowered the activities of the catalysts.

e) Effect of ageing time

Change % in ageing time changed conversion and light alkenes selectivity. As expected, preparation of the catalysts in different ageing times led to notable ethylene selectivity. The unage catalyst showed low ethylene selectivity.

4. Conclusions

Experiments of FT synthesis carried out in a microreactor provided important information useful for the design of the process unit. As was shown, several reactions may proceed simultaneously over the cobalt catalyst during the synthesis of hydrocarbons from synthesis

gas. Water gas shift (wgs) and bodouard reactions are side reactions and produce carbon bulk and carbon dioxide in the catalyst bed of the reactor and must be inhibited by changing the process conditions.

In this paper, effective parameters such as ageing time, temperature, pressure of the reaction and space velocity were investigated (others have not investigated the ageing time parameter). The Co/CeO_2 catalyst in the 165 minute ageing time has been found to be selective for light alkenes production from synthesis gas. Both samples have a high activity for the bodouard reaction. In high pressure and $H_2/CO>1$, production of olefins is very low. In general, high temperature, low pressure and low H_2/CO are effective for the production of light olefins with high selectivity.

References

1. Varma, R. L. and Bakhshi, N. (1990). *Ind. Eng. Chem. Res*., *29*, 1753-1757.
2. Stull, D. R., Westrum, E. F. and Skinke, G. C. (1969). *The chemical thermodynamics of organic compounds*. Wiley, New York, 67.
3. Rabo, J. A., Risch, A. P. & Poustma, M. L. (1978). *J. Catal, 53*, 287-294.
4. Kuipers, E. W., Scheper, C., Wilson, J. H., Vinkenburg, L. H. & Oosterbeek, H. (1996). *J. Catal*, *158*, 228-300.
5. Schulz, S., Beck, K. & Erich, E. (1988). *Fuel Proc. Tech., 18*, 293-304.
6. Twigg, M. V. (1989). *Catalyst handbook*, 2nd, Wolf Publishing ltd., 110.
7. Snel, R. (1987). *Catal. Rev. Sci. Eng., 29*, 361-445.
8. Friedel, R. A. & Anderson, R. B. (1950). *J. Am. Chem. Soc., 72*, 1212-1215.
9. King, D. L., Cousumano, J. A. & Garten, R. L. (1981). *Catal. Rev. Sci. Eng*., *23*, 233.
10. Dictor, R. A. & Bell, A. (1986). *J. Catal, 97*, 121-136.
11. Bukur, D. B., Mukesh, D. & Patel, S. A. (1990). *Ind. Eng. Chem. Res., 29*, 194-204.
12. Steynbery, A. P., Espinoza, R. L., Jager, B. & Vosloo, A. C. (1999). *Appl. Catal. A: General 186*, 41-54.