A Micro-structured 5 kW Complete Fuel Processor for Iso-octane as Hydrogen Supply system for Mobile Auxiliary Power Units

Gunther Kolb[1], Jochen Schürer[1], David Tiemann[1], Athanassios Ziogas[1], , Volker Hessel[1], Holger Löwe[1], Hermann Ehwald[2]

[1] Institut für Mikrotechnik Mainz (IMM)

[2] Formerly Institute of Applied Chemistry (ACA, now Leibnitz Institute of Catalysis, LIKAT), Berlin

For mobile and portable applications of fuel cell technology there is a need for compact hydrogen supply systems [1]. Fuel processors are a viable option for energy supply of fuel cells owing to the high energy density of liquid fuels such as alcohols and hydrocarbon mixtures. A fuel processor is composed of the reformer reactor itself and devices dedicated to remove the carbon monoxide out of the fuel, which is frequently performed by catalytic reactions such as water-gas shift and preferential oxidation [2].

At IMM, a complete fuel processor was developed and put into operation, which was designed to supply a 5 kW fuel cell with purified reformate applying iso-octane as fuel. Iso-octane had been chosen as a model substance for gasoline. Micro-structured plates coated with noble-metal based catalysts were used to build the reactors either as monoliths or as cross-flow plate heat-exchangers.

Fig.1a shows a flow scheme of the fuel processor, which was installed on a bread-board level. The test rig itself is shown in Fig.1b.

The autothermal reformer (ATR) is shown in Fig.2. It is composed of 200 microstructured metal foils of 400 µm thickness carrying a total of 25,000 channels each 400 µm wide and 250 µm deep. This corresponds to a channel density of 2,520 channels/in² and a total surface area of 2.6 m². The reactor has a width and height of 80 mm at a total length of 150 mm. It has a monolithic design. The water/steam mixture generated externally by a conventional 8 kW evaporator and superheated to 650°C in a 3 kW micro-structured gas heater is introduced into the reactor inlet, whereas iso-octane vapour is introduced into the reactor directly at the inlet diffuser. This arrangement avoids the occurrence of homogeneous reactions in the equipment upstream the reactor itself (i.e. in the gas heater). A 1 wt.% Rh on alumina sol carrier catalyst was coated onto the microstructured plates, which were then sealed by laser welding and put into a stainless steel housing to assure mechanical stability at the maximum operating temperature of 800°C and the maximum operating pressure of 4 bar. The total amount of catalyst incorporated into the reactor was 19.8 g, which corresponds to 0.2 g of the active Rh species. The reactor was operated at a WHSV of 330 $Ndm^3/(min\ g_{cat})$.

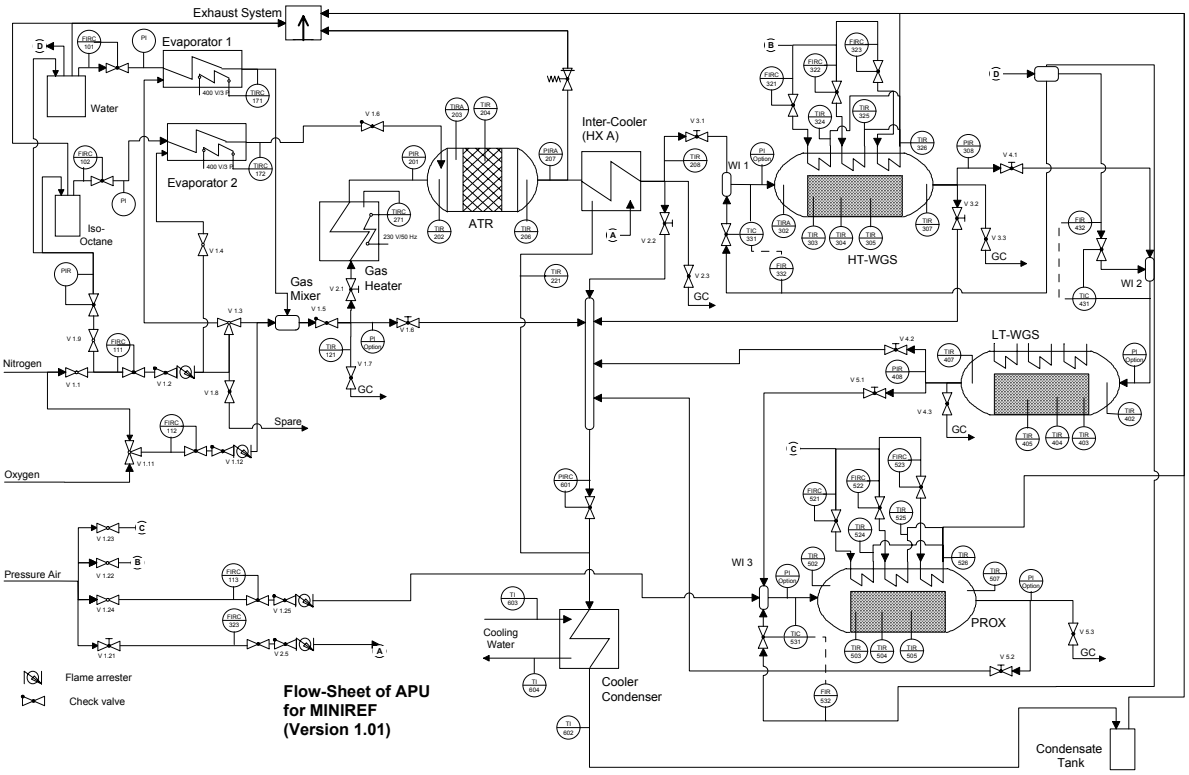

Fig.1: Flow Scheme of the fuel processor

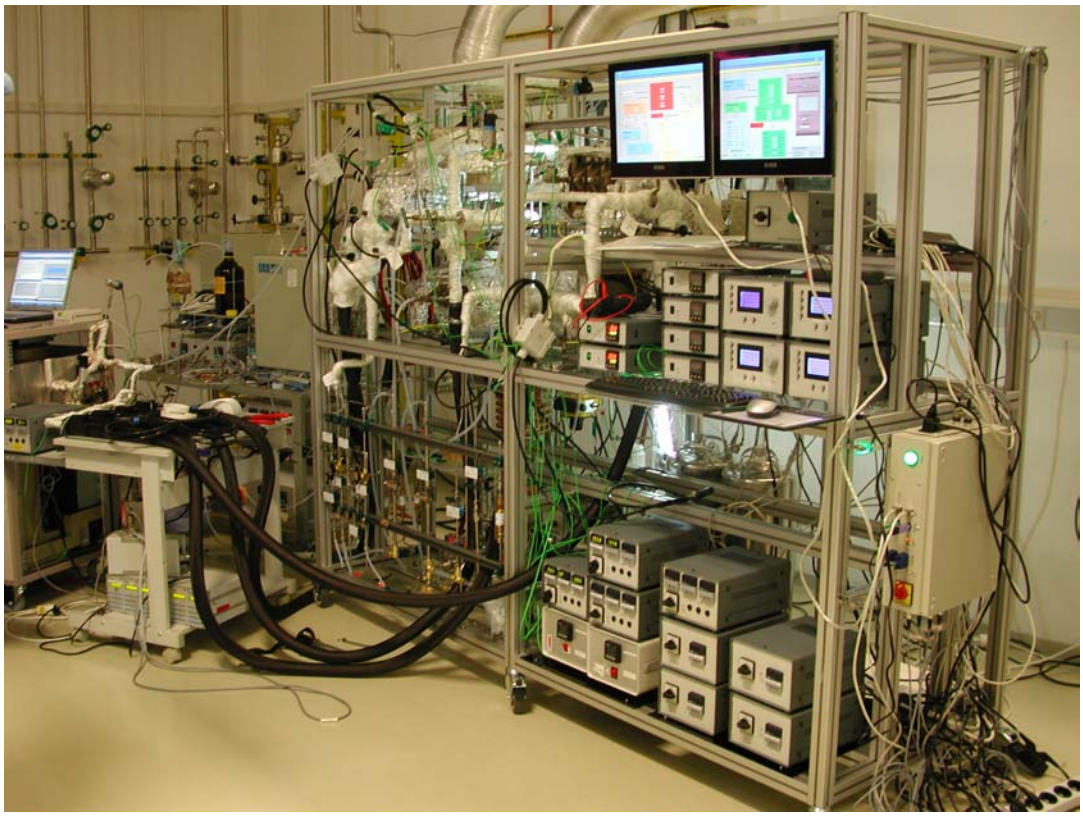

Fig.2b: The test rig; the reactors of the fuel processor are placed on the top left

Fig.3 shows the high temperature water-gas shift reactor (HT-WGS), which has cross-flow cooling capabilities. The key data of the HT-WGS and of the other CO clean-up reactors discussed below are provided in Tab.1. As catalyst for water-gas shift, a 1 wt.% Pt/CeO2 on alumina carrier developed by Institute de Recherche sur la Catalyse, (IRC), Villeurbanne was incorporated into the reactor.

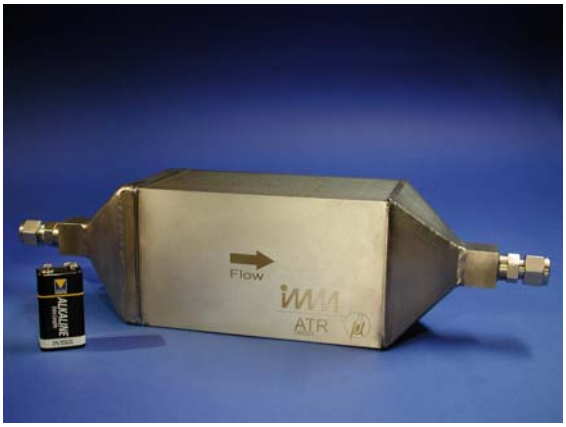

Fig.2: ATR reactor

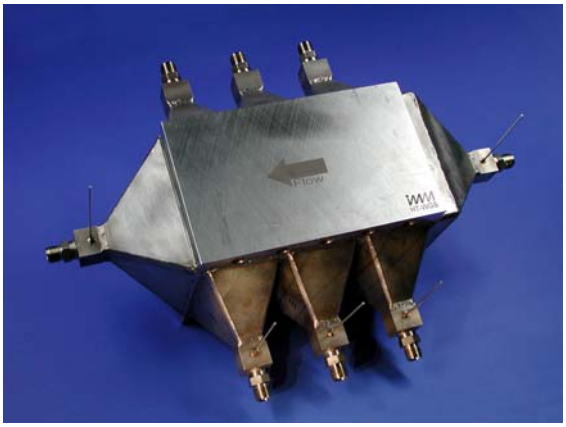

Fig.3: HT-WGS reactor

Reactor	HT-WGS Cooled (3 stage cross-flow)	LT-WGS Un-cooled (monolithic)	PrOx Cooled (3 stage cross-flow)
Max. operating pressure [bar]:	4	4	4
Max. operating temperature [°C]:	450	450	300
Reactor dimensions (L x W x H) [mm]: Number of foils Foil thickness [mm]:	200 x 120 x 120 110 1	200 x 120 x 130 130 1	200 x 120 x 120 110 1
Channel dimensions (reactor side) (W x H) [µm]: Channel density [channels/in²]: Total number of channels:	600 x 800 720 16000	600 x 800 720 19000	600 x 800 720 16000
Coated channel surface [m²]:	1.5	1.8	1.5
Catalyst:	1 wt.% Pt/CeO_2 on Al_2O_3	1 wt.% Pt/CeO_2 on Al_2O_3	2 wt.% Pt on zeolite X
Tot. catalyst mass [g]:	232	274 g	138 g
WHSV:	38 $Ndm^3/(h\ g_{cat})$	33 $Ndm^3/(h\ g_{cat})$	63 $Ndm^3/(h\ g_{cat})$

Table 1: Key data of the CO-clean-up reactors

The HTS reactor carried cross-flow cooling channels additionally to remove the heat generated by the water-gas shift reaction. The same catalyst was applied for the low temperature water-gas shift reactor (LT-WGS, see Fig.4). However, the latter reactor was not designed as a heat-exchanger because the low heat-generation by low-temperature water-gas shift does generate merely a small amount of heat, which was expected to be lost by free convection over the surface of the reactor insulation.

This does not apply for the preferential oxidation of carbon monoxide (PrOx) and thus cross-flow cooling capabilities were introduced into the corresponding reactor, which is shown in Fig. 5, similar to the reactor for HT-WGS. A catalyst composed of 2 wt.% Pt on Zeolite X developed by Polytechnico Torino was incorporated into the reactor.

The clean-up reactors were switched in series after the ATR. Additionally, a micro-structured heat-exchanger was incorporated between the ATR and the HT-WGS reactor to cool down the reformate from the exit temperature of the ATR to the desired feed temperature of the HT-WGS (see Fig.6). It had a heat-exchange capacity of 2 kW under the conditions applied. Pressurised air was applied as cooling agent.

Prior to the incorporation of the reactors into the test-rig, they had been tested individually for their performance applying octane/steam/air feed for the ATR and simulated off-gas of the reactor upstream for each of the CO clean-up reactors.

Fig.4: LT-WGS reactor

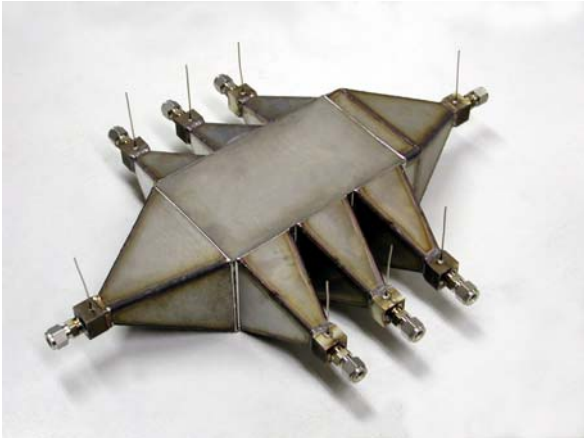

Fig.5: CO-PrOx reactor

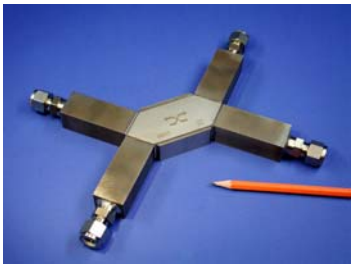

Fig.6 2 kW heat-exchanger applied for cooling the reformate

Fast on-line (Micro-)GC analysis was applied for chemical analysis of the reformate. Samples could be taken after each of the four reactors. The advantage of this analysis system is its low time demand of about 2 min. per analysis. This way, an overview of the performance of all reactors of the fuel processor could be gained within less than 15 min. However, its drawback was, that only a water content of less than 15 Vol.% could be tolerated by the instrument. Thus all water was removed out of the gas flows before entering the GC by a tube filled with molecular sieve and results of analysis are reported on a dry basis (d.b.).

As shown in Tab.2, the gas composition of the reformate changed from reactor to reactor during the operation of the fuel processor until a CO concentration of 120 ppm dry base was achieved after the PrOx reactor. In Tab.2, the feed composition of the ATR is shown in the left column. Next the results of a calculation of the product composition are shown, which were determined assuming full conversion of the octane and establishment of equilibrium conditions for the water-gas shift and methanation reactions at the outlet temperature of the ATR reactor. In the third column of Tab.2, the composition of the ATR product is shown on dry basis. A good agreement with the data as determined experimentally during operation of the fuel processor was achieved (fourth column of Tab.2). Besides the desired and expected products CO, CO_2, H_2 and CH_4, also small amounts of ethylene and propylene were found in the reformer product. Different to methane, these gases damage the fuel cell catalyst with course of time. The same applies for the catalyst of the CO clean-up reactors downstream the ATR. However, over the total short-term operation of about twenty hours of the fuel processor, a degradation of the reactor performance was not yet observed.

The next columns show the product composition as determined downstream the HT-WGS, LT-WGS and CO-PrOx, respectively.

The CO content of the reformate of 120 ppm would be low enough for a CO-tolerant low temperature PEM fuel cell system. A second stage PrOx reactor (not shown here), which had been built, did reduce the CO-concentration of the reformate below 50 ppm, which had been demonstrated separately for the single reactor applying simulated reformate. This value is generally regarded as acceptable for reformate tolerant membranes of PEM fuel cells. About 150 Ndm³/min reformate were processed in the micro-structured reactors.

Feed ATR								
S/C 3.3		O/C 0.7						
		calculated [100% Conversion]			experimentally determined			
		feed ATR	product ATR	product ATR [d.b.]	product ATR	product HT-WGS	product LT-WGS	product PrOx
					[d.b.]			
H_2O	[mol %]	67.3	40.4	0.0	-	-	-	-
N_2	[mol %]	23.4	18.1	30.4	33.7	30.4	30.4	34.9
O_2	[mol %]	6.8	0.0	0.0	0.0	3.0	0.0	0.0
C_8H_{18}	[mol %]	2.5	0.0	0.0	-	-	-	-
CH_4	[mol %]	0.0	1.7	2.9	2.6	3.0	3.0	2.2
C_2H_4	[mol %]	0.0	0.1	0.2	0.2	0.2	0.2	0.2
C_3H_6	[mol %]	n.d.	n.d.	n.d.	[0.03]	[0.05]	[0.04]	[0.04]
CO	[mol %]	0.0	5.3	8.9	9.4	1.0	0.6	0.0
CO_2	[mol %]	0.0	8.5	14.2	15.2	21.0	21.3	21.2
H_2	[mol %]	0.0	25.8	43.3	41.7	46.5	47.2	44.4

Tab.2: Gas composition of the ATR feed and product composition as determined experimentally for the 4 reactors of the fuel processor

References

[1] Kolb, G., Hessel, V., „*Review: Micro-structured reactors for gas phase reactions*“,Chem. Eng. J. 98 (2004) 1
[2] Hessel V., Löwe H., Müller, A., Kolb G., 2005, ’*Chemical Micro Process Engineering- Vol.2: Processing, Applications and Plants; Chapter2: Microstructured Fuel Processors for Energy generation*’, Wiley, Weinheim, ISBN-13 978-3-527-30998-6, p.281 ff.