A simple design method for multicomponent distillation columns

D.P.Rao, Amit Kumar, Ashok Kumar, Devendra Agarwal, Abhishek Sinha*
Department of Chemical Engineering,
Indian Institute of Technology, Kanpur 208016, India

Abstract:

Multicomponent-distillation calculation methods are classified as rating or design methods. A few rating methods are widely used but none of the design methods has found general acceptance. Recently, a few design methods have been proposed using the stage-to-stage calculations and starting from one of the ends of the column, but they require tedious calculations. We present here a simple design method in which the stage-to-stage calculations are initiated from the feed stage with the feed composition. The method permits the use of component or matrix tray efficiencies or the nonequilibrium-stage model to estimate the number of stages. We have studied the convergence behavior of the proposed method for several systems. The convergence was achieved in all the cases within 3-20 iterations taking CPU time in the order of 100th of a second on a PC with a Pentium 4 processor.

---

* Corresponding author.
Tel.:+91-512-2597873
Fax: +91-512-2590104
E-mail address: dprao@iitk.ac.in (D.P.Rao)

1. Introduction

Multicomponent distillation calculations are classified as design or rating methods. In the former, the number of stages have to be determined given the recovery of key components and in the latter the composition of products have to be found given the number stages in the enriching and stripping sections. Lewis-Matheson (1932) proposed a method of the stage-to-stage calculations for multicomponent distillation. To determine an approximate distillate composition, they considered that the components lighter than light key will present only in the distillate and the heavier than heavy in the bottom product. Assigning arbitrarily small amounts for the missing components, they proposed to compute the product compositions to initiate the stage-to-stage calculation and match the feed stage compositions computed from both ends. The discrepancy between the feed stage compositions thus computed is used to revise the products compositions. However, this method did not gain acceptance and currently there are no simple and robust design methods Fidkowski et al. (1991).

To avoid the arbitrary assignment of the missing components in the products, Thiele-Geddes(1933) proposed a method in which they preassigned the number stages in each sections and determined the product compositions. This method lends itself well to cast the component and enthalpy balances around the stages into elegant tridiagonal or block diagonal matrix equation(s). Then, the Newton-Raphson method is used to find the compositions of products and liquid and vapor streams in the column. The developments in this direction led to the well-known Napthali-Sandholm method and its variants. To extend the domain of convergence and to find multiple solutions, physical and mathematical homotopy-continuation methods are used. Ketchum (1979) integrated the relaxation method, proposed by Rose et al. (1958), into a variant of the Napthali-Sandholm method. These can be adopted for equilibrium

and nonequilibrium stage models and reactive distillation. Hass (1992) reviewed the developments of these methods. These methods are robust and several commercial softwares have incorporated them for solving rating problems. The above methods are used for the design as well, but require the solutions of several runs of rating problems. Based on the experience, the industrial practice or using the Fenske-Underwood-Gilliland short-cut method, one obtains the near about solution for the design problem. This solution can be used to minimize the rating runs required to arrive at the solution of design problem. This, perhaps, is widely design method at present.

The design method has been revived recently in the context of azeotropic distillation and to determine rigorously the minimum reflux. Levy et al. (1985) and Julka and Doherty (1993) proposed methods for the direct and indirect split of ternary and multicomponent mixtures based the 'distillation' lines and showed they can be used for any split of multicomponent systems. Thong et al. (2000), Thong and Jobson, (2001) proposed methods using the 'stage-composition' lines. In a way, these are similar to the Lewis-Matheson method, but the match is found either geometrically or by a 'tuning' algorithm.

Ideally a method solution should be such that it is applicable both the problems and should be simple enough to enable practicing engineer to use it or code it if required and fast enough to enable its use for online simulation and control. The objective of this work is to propose such a method.

Proposed Design Method

The design method given here, like all other design methods, is based on the state-to-stage calculations. The other design methods iterative calculations are initated with an assumed distillate or/and bottom product compositions. As mentioned earlier, a minor variation in the composition could lead to widely differing stage-composition profiles (Thong et al. 2001). To avoid this difficulty, we initiate the iterative calculations using the feed compositions at the feed plate. The method is presented below.

To proceed with the calculations, we need to specify the flow rate, compositions, and quality of the feed besides the values of the following four more of the variables:

(1) Reflux ratio, R
(2) Flow rate of distillate, D, or bottom product, B.
(3) Fractional recovery of one of the components (referred to hereafter light key(lk) or heavy key(hk) component) in distillate or bottoms
(4) Criterion for introducing feed; the choice of which is given in a later section.

The value of D or B can be computed form the specification of the fractional recoveries of light key and heavy key components. However, the check has to be made if D or B is above the allowable value. Otherwise, the recovery of light or heavy key cannot be achieved.

Figure 1 shows a sketch of the column with the notation used for various streams. To initiate the stage-to-stage calculations, we need estimates of x_{di}, y_{fi}, L_f and V_{f+1}. and these are obtained as given below:

i) Considering all the components lighter the light key component go with the distillate and heavier ones go with the bottoms estimate x_{di}.
ii) The streams V_{f+1} and L_f are estimated considering the equimolar over flow over the stages.

iii) We have set $y_{f+1,i} \leftarrow z_{Fi}$ irrespective of the feed being vapor, liquid or a two-phase mixture.

Then, the composition of the liquid leaving the feed plate, x_{fi}, is obtained from the component balance

$$L_f x_{f,i} = V_{f+1,i} y_{f+1,i} - D x_{di} \qquad (1)$$

The composition of vapor leaving the feed stage, $y_{f,i}$ and T_f are found from the bubble-point calculations as the $x_{f,i}$ are known. Then, the L_{f-1}, V_f and $x_{f-1,i}$ are found from the component and enthalpy balances around the feed stage (shown in figure 1(b)). Similar calculations for the next upper stage give the values of unknown variables in the streams which are connected to it. This sequence of calculations is continued till the specified composition of the lightest component (from the specified fractional recovery of the lightest component and the distillate flow rate) is reached in the vapor stream leaving the current stage. This yields the number of stages in the enriching section and the distillate product distribution.

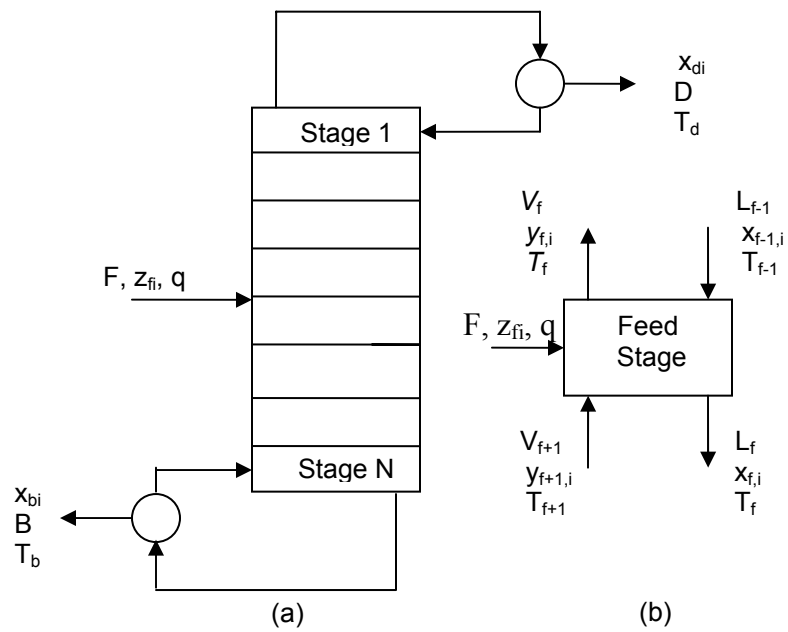

Figure 1: (a) A distillation Column & (b) Feed Stage

Now, the composition and rate of the bottom product can be found from the overall material and enthalpy balance around the column. The stage-to-stage calculations are then carried out starting from the reboiler moving upwards. This sequence of calculations is continued till the specified criteria for the feed introduction is met. This completes the stripping section calculations and gives the number of stages in the stripping section and also the feed stage location. This completes one iteration of the process.

We have used a step-limiting factor in using the new distillate stream for further calculations as exhibited in equation(2).

$$x_{di,new} = x_{di,old} + t(x_{di,new} - x_{di,old}) \qquad (2)$$

During the calculations, it is likely that the fractional recovery of the lightest component exceeds that specified due to integral increments in stages. In such cases, fractional stage is found by linearly interpolating the fractional recovery of the lightest component between that of the vapor entering and the vapor leaving the top stage. The mole-fractions of other components are then interpolated in the same ratio. The procedure, as described above, is continued until the following convergence criterion is met:

$$\frac{\sum_{i=1}^{N}\left(\sum_{j=1}^{C}\left((y_{j,i}^{I+1}-y_{j,i}^{I})+(x_{j,i}^{I+1}-x_{j,i}^{I})\right)+\left(\frac{T_i^{I+1}-T_i^{I}}{T_F}\right)\right)}{N}\leq 10^{-4} \quad (3)$$

Feed stage criterion

What are the conditions that would lead to the solutions without divergence? These can be inferred form the diagram presented by Doherty and Malone (2001) for a direct split of a ternary system of components 1, 2 and 3. Fig. 2 shows the diagram. It presents a stripping composition profile (●) and a number of enriching composition profiles (□). The stage from which the enriching profile is computed is the feed stage. Note the saddle and node pinches (for details, see Doherty and Malone, 2001). There is a stripping stage below which no solution is possible. For such a case the method diverges and the light component mole fraction assumes values greater than one. Also note the feed plate composition is different from the feed composition. The criteria for introducing feed should therefore be based keeping the above observation in mind.

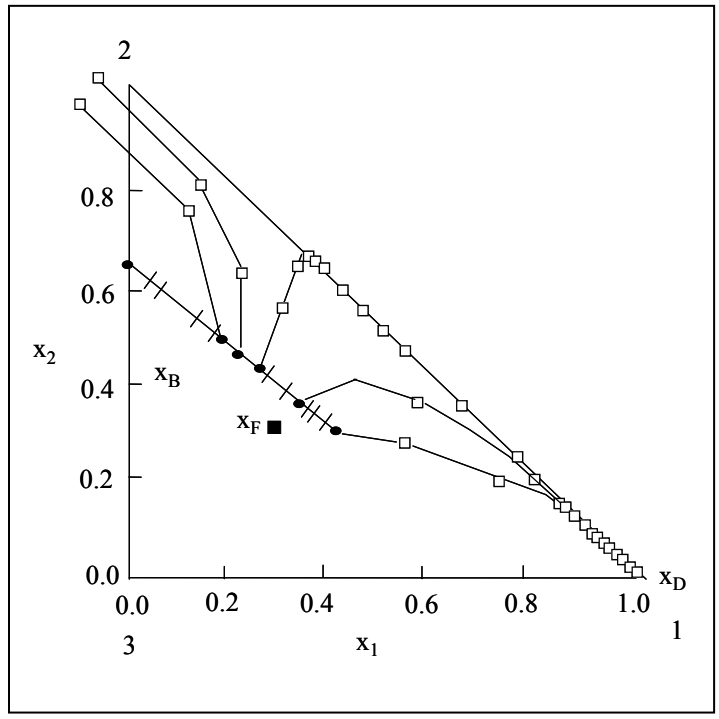

Figure 2: Stripping and enriching section profiles starting from various stages on stripping profile

Unlike in binary distillation, it is not possible, *a priori*, to set criterion to identify the optimum feed plate. Where the split is direct the lightest component recovery in the distillate can be specified. On the other hand, if the split is not direct the light key profile in the enriching section goes through a maximum. The heavy key exhibits a reverse trend. On the other hand, the lightest or heaviest components show monotonically increasing or decreasing behavior along the column. Therefore, we have selected the lightest key as a feed introduction criterion, that is , if the lightest component mole fraction on the topmost stripping section a value ,$y_{1,cri}$, the next stage is chosen as the feed stage. As the calculations proceed, the lightest component composition will exceed its feasible composition limits (given by Fz_{f1}/D) in the distillate if feed is introduced too early in the stripping section. If it is too late the light key will not be reached. However, by varying the recovery of the lightest component, it possible to reach the desired recovery of the light key component. In proposed method a search has to be made to determine feed stage.

Downward scheme

We may refer to the moving upward during the stage-to-stage calculations as upward scheme. We may follow a downward scheme. In this scheme, exactly similar approach is followed. In this case, the recovery of the least volatile component in the bottoms is specified. The calculation is initiated at the feed plate as done earlier, but now we set the initial composition of

the liquid stream entering the feed plate as the feed composition. The stage-to-stage calculation moves downwards to the bottom plate. The stripping section calculation is terminated when the specified recovery of the least volatile component is obtained in the bottom product. The distillate amount and composition is computed from the overall material balance. The calculation then proceeds from the distillate to feed plate. The iterations are continued till the convergence achieved.
The downward and upward schemes of calculations are equivalent. The upward scheme was found to be faster when more number of components is present in substantial amount (fraction of feed) in the bottoms than in the distillate. Reverse is true for the upward scheme.

Algorithm

The proposed method upward algorithm summarized given below.

1. Calculate initial $x_{d,i.}$ as indicated in the text; set fractional recovery of the lightest 0.99999 and compute x^*_{d1} (=0.99999Fx_F/D)
2. Set N_e = 1;
3. Set $y_{Ne-1,i} \leftarrow y_{Fi}$, $L_{Ne} \leftarrow$ RD and $V_{Ne-1} \leftarrow$(R +1)D.
4. Calculate and $x_{Ne,,i}$ from the material balances around the enriching section.
5. Calculate y_{Ne}, V_{Ne} and L_{Ne+1} from material and enthalpy balance around the stage N_e.
6. Check if $x^*_{d,1}>y_{Ne,1}$; if yes, go to step 7; else adjust $y_{1,cri}$ go to step 11.
7. Check if $x_{d,lk}>y_{Ne,lk;}$ if yes, set *Ne*←*Ne*+1 go to **step 4;** else go to **step 8.**
8. Calculate fractional part of the stage Ne as indicated in the text.
9. Find new distillate using the step-limiting factor.
10. Calculate $x_{b,i}$ from the material balances around the column.
11. Set N_s =1, $x_{Ns,,i=}$ $x_{b,i}$, L_{Ns}=B
12. Calculate y_{Ns} from bubble point calculations.
13. Calculate x_{Ns+1} , L_{Ns+1}, and V_{Ns} and form material and energy balance on the stripping section
14. Check if $y_{Ns,L} > y_{1,,cri.}$; If yes, then go to step 16; else go to step 15
15. Set N_s= N_s+1, Go to step 12
16. Calculate the discrepancy
17. Check discrepancy < tolerance criteria. If yes then converged Go to 18, else set y_{Fi} = y_{Ns} and V_{Ne-1}= V_{Ns} and go to step 2
18. Results

Similar algorithm for downward scheme was used.

7. Results and discussion

We have solved more than 100 of problems involving following systems.

1. Methanol, ethanol, benzene, toluene
2. Methanol, ethanol, 2-propanol, 1-propaonal, and toluene
3. Acetone, methanol, 2-propanol, 1-propanol, and toluene
4. Methanol,ethanol,2-propanol,1-propanol
5. Benzene, toluene, ethylbenzene, styrene, diethylbenzene, triethylbenzene, diphenyl.
6. Benzene, toluene, aniline
7. Benzene, water, toluene
8. Benzene, water, toluene, aniline
9. Methanol, ethanol, benzene, water, toluene, aniline
10. Methanol, ethanol, benzene, cyclohexane, 2-propanol, water, toluene, and aniline

11. Methanol, ethanol, benzene, cyclohexane, 2-propanol, 1-propanol, water, toluene, and aniline

We have considered these systems to exhibit ideal and nonideal behavior. Some these are close boiling and widely differing in their boiling points. For all cases convergence was obtained, normally within 20 iterations taking CPU time in the order of a few milliseconds. The step length employed in the calculation was generally between 0.1 and 1. In most cases a value of 0.5 is satisfactory. Although in a few cases a small step length like 0.001 was required for the convergence. One case of two feed column and another with component efficiencies was solved. The performance of the method is presented with the aid of one example for the sake of brevity.

Example: System: acetone, methanol, 2-propanol, 1-propanol, and toluene was considered. Pressure 1 atm. The feed is saturated liquid and molar flow of each component is 20 mol/s. We have considered the vapor phase to be an ideal gas and the liquid mixture an ideal solution. The performance of the method for all possible sharp splits between components is presented below.

Table 1: Component flow rates in Distillate during iterations

Iteration	Component flow rate in distillate				
	Acetone	Methanol	2-Propanol	Propanol	Toluene
Assumed	19.98	0.02	0.0	0.0	0.0
First iteration	19.98	0.02	0.0	0.0	0.0
converged	19.98	0.02	0.0	0.0	0.0

(a)*Split: between Acetone/Methanol:*

This is a case of a direct split. D= 20 mol/s, R=10. The recovery of acetone in the distillate is 0.999. Feed introduction criterion is $y^s_{1,cri} > 0.4$.

A step length of 1.0 was used in the calculation. Convergence was obtained in 3 iterations. It was found 72.6 stages are required; N_e= 30.6 and N_s =42). The component flow rate in the distillate at during iterations are given in Table 1. Figure 3 presents the variation of the number of stages in the stripping and enriching sections with iteration.

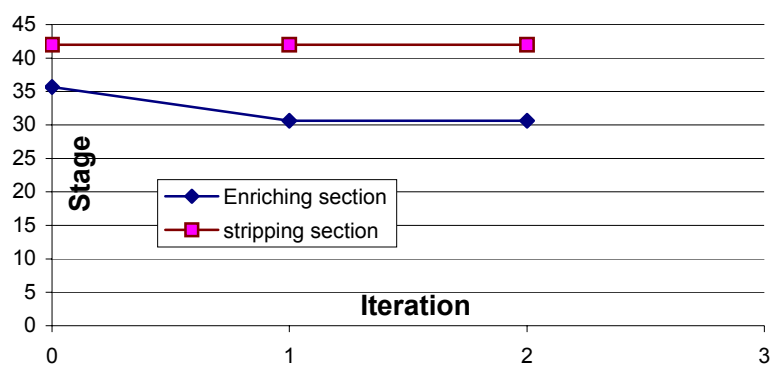

Figure 3: Number of stages vs. Iteration

Table 2: Component flow rates in Distillate at various

Iteration	Component flow rate in distillate				
	Acetone	Methanol	Propanol 2	Propanol	Toluene
Assumed	19.998	19.98	0.02	0.0	0.0
First	19.998	9.948	7.104	1.792	1.156
Converged	19.998	19.66	0.32	0.01	0.006

b. Split: Methanol/2-Propanol

In this case, the split is between methanol and 2-propanol. D = 40 mol/s. R= 4. The fractional recovery of methanol in the distillate is 0.98. The feed is introduction criterion, $y^s_{1,cri} > 0.2$. We have chosen the acetone fractional recovery as 0.9999 to obtain the desired split. The step length employed in the calculation was 0.2. For this problem convergence was achieved in 22 iterations. It was found 26 stages are required (N_e= 5 and N_s

= 21). The component flow rate in the distillate at various iterations are tabulated in Table 2. The variation in the number of stages in the two sections with iteration is shown in Figure 4.

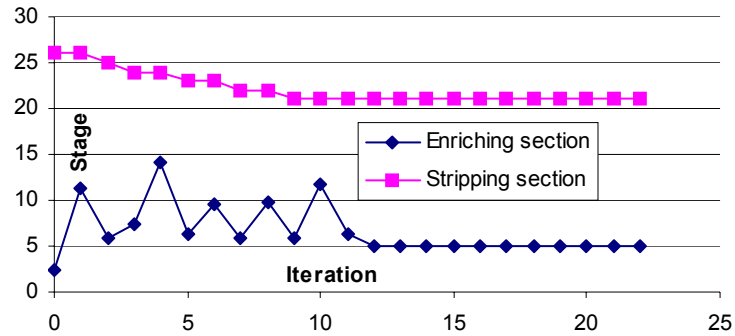

Figure 4: Number of stages vs. Iteration

c. split 2-Propanol / Propanol

In this problem split is between 2-propanol and 1-propanol. B = 40 mol/s. R = 3. This problem was solved using the downward scheme. The fractional recovery of proponol in the bottomws 0.95. The toluene recovery in bottoms was set at 001. The feed introduction criterion was $x^{e}_{5,cri} > 0.2$. The step length was 0.2. The convergence was obtained in 8 iterations. It was found that the number of stage were 15.8 stages.($N_e = 11$ and N_s = 4.8). The component flow rate in the distillate at various iterations are tabulated in table 3.The variation in the number of stages in the two sections with iteration is plotted in figure 5.

Table 3: Component flow rate in Distillate at various iterations

Iteration	Component flow rate in distillate				
	Acetone	Methanol	Propanol 2	Propanol	Toluene
Assumed	0.02	0.2	0.2	19.8	19.98
First	1.544	2.036	7.084	9.368	19.98
converged	0.032	0.048	0.912	19.04	19.98

d. *Split propanol/ toluene*

In this case, the split is between propanol and toluene. This problem was solved using downward scheme. The toluene fractional recovery in bottoms was 0.99. D = 80 mol/s and R= 3 Feed is introduction was $x^{e}_{5,cri} > 0.3$. Step length of 1 was employed in calculation. Convergence for this problem was obtained in 3 iterations. It was found The number stages required was 30.1 (N_e= 16 and N_s = 14.1). The component flow rate in the distillate at various iterations are tabulated in table 4.The variation in the number of stages in the two sections with iteration is shown in figure 6.

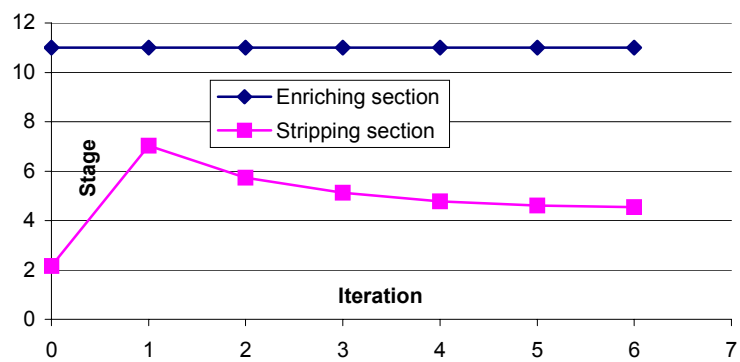

Figure 5: Number of stages vs. Iteration

Table 4: Component flow rate in Distillate at various iterations

Iteration	Component flow rate in distillate				
	Acetone	Methanol	Propanol 2	Propanol	Toluene
Assumed	0.0001	0.02	0.02	0.20	19.8
First	0.004	0.004	0.002	0.232	19.8
converged	0.004	0.004	0.002	0.232	19.8

Conclusions

We have presented a design method based on the stage-to stage calculations for different types splits. The calculations are initiated with the feed composition as the feed-stage composition. The method is simple and fast. However, further work is required to make the method compatible with any set of specified variables. Also there is a need for integrating a search method with the main program for finding an optimum feed stage based on some appropriate objective function.

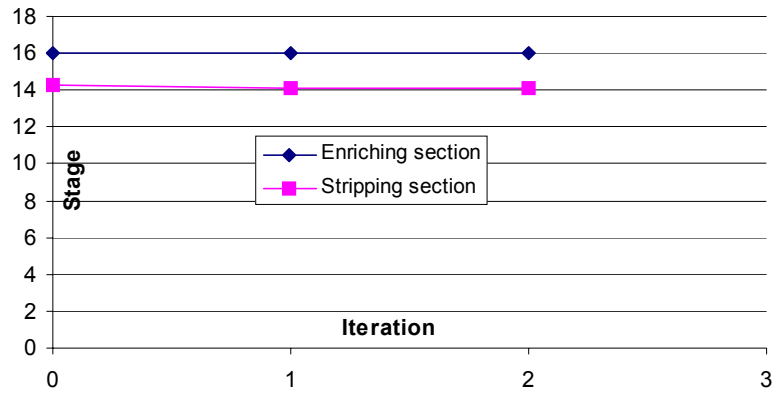

Figure 6: Number of stages vs. Iteration

References:

1. Lewis, W. K., and Matheson, G.L., "Studies in Distillation Design of Rectifying Columns for Natural and Refinery Gasoline", *Ind. Eng. Chem*., 24, 494, (1932).
2. Thiele E.W. and Geddes, R. L. Computation of distillation apparatus for hydrocarbon mixtures, Ind.Eng. Chem. 25, 289, 1933.
3. Fidkowski, Z. T., Malone M. F. and Doherty, "Nonideal Multicomponent Distillation: Use of Bifurcation theory for Design" , AIChE J, 37,1761 (1991)
4. Doherty, M.F., & Malone, M.F., "Conceptual Design of Distillation Systems", *McGraw Hill Book Company Inc.,* New York, (2001).
5. Ketchum, R.G., Chem. Eng. Sci. A combined relaxation-Newton methodas a new global approach to the computation of thermal separation processes, 34, 387,1979
6. Levy, S. G., Van Dongen, D. B. and Doherty M.F., Design and synthesis of homogenous azeotropic distillation.II. Minimum reflux calculations for noideal and azeotropic columns. Ind. Engng. Chem. Fundam., 24, 463, 1985.
7. Julka V. and Doherty M. F.,Geometric nonlinear analysis of multicomponent Nonideal distillation: A simple computer-aided design procedure, Chem. Eng. Sci., 48,1367, 1993.
8. Thong, D. Y.-C, Casttillo F.J. L. and Towler G. P. , Distillation design and retrofit using stage-composition lines, Chem. Eng. Sci., 55, 625, 2000.
9. Thong, D. Y.-C, and Towler G. P., Multicomponent homogenous azeotropic distillation 2. Column design, Chem. Eng. Sci., 56, 4393, 2001.
10. Rose, A., Sweeny, R. and Schrodt, V., Continuous distillation calculations by relaxation method, Ind. Eng. Chem. 50, 737, 1958.
11. Haas, J. R., Rigorous Distillation Calculations, In 'Distillation Design' Kister, H. Z., Mc Graw-Hill, Inc. 1992.