Systamatic design of split range controllers

Adriana Reyes-Lúa[a], Cristina Zotică[a], Krister Forsman[a,b], Sigurd Skogestad[a*]

[a]Department of Chemical Engineering
Norwegian University of Science and Technology (NTNU)

[b]Perstorp Specialty Chemicals, Sweden

[*] *sigurd.skogestad@ntnu.no*

NTNU
Norwegian University of Science and Technology

26 April 2019

HighEFF

IFAC DYCOPS 2019, Florianopóolis, Brazil

Outline

1. Introduction

Objective

- simple control structures to implement optimal operation

1. Introduction

Objective

- simple control structures to implement optimal operation
- systematic design procedure

1. Introduction

Objective

- simple control structures to implement optimal operation
- systematic design procedure

Advanced control structures

- cascade control
- feedforward control
- decoupling
- split range control (SRC)
- valve positioning control (VPC)
- selectors (min,max)

1. Introduction

Objective

- simple control structures to implement optimal operation
- systematic design procedure

Advanced control structures

- cascade control
- feedforward control
- decoupling
- **split range control (SRC)**
- valve positioning control (VPC)
- selectors (min,max)

1. Introduction

Application

- more than one MV[1] available for *one* CV[2]

[1] Manipulated Variable
[2] Controlled Variable

1. Introduction

Application

- more than one MV[1] available for *one* CV[2]
- extend the steady-state operating range

[1] Manipulated Variable
[2] Controlled Variable

1. Introduction

Application

- more than one MV[1] available for *one* CV[2]
- extend the steady-state operating range
- switch to another MV when the original MV saturates

[1] Manipulated Variable
[2] Controlled Variable

1. Introduction

Application

- more than one MV[1] available for *one* CV[2]
- extend the steady-state operating range
- switch to another MV when the original MV saturates

Motivation

- $>$ 75 years (Eckman, 1945)
- commonly used in industry
- little studied from a theoretic perspective

[1] Manipulated Variable
[2] Controlled Variable

2. Split range control. Text books examples

Eckman, D.P. (1945). Principles of industrial control, pp.204-207. John Wiley & Sons, New York.

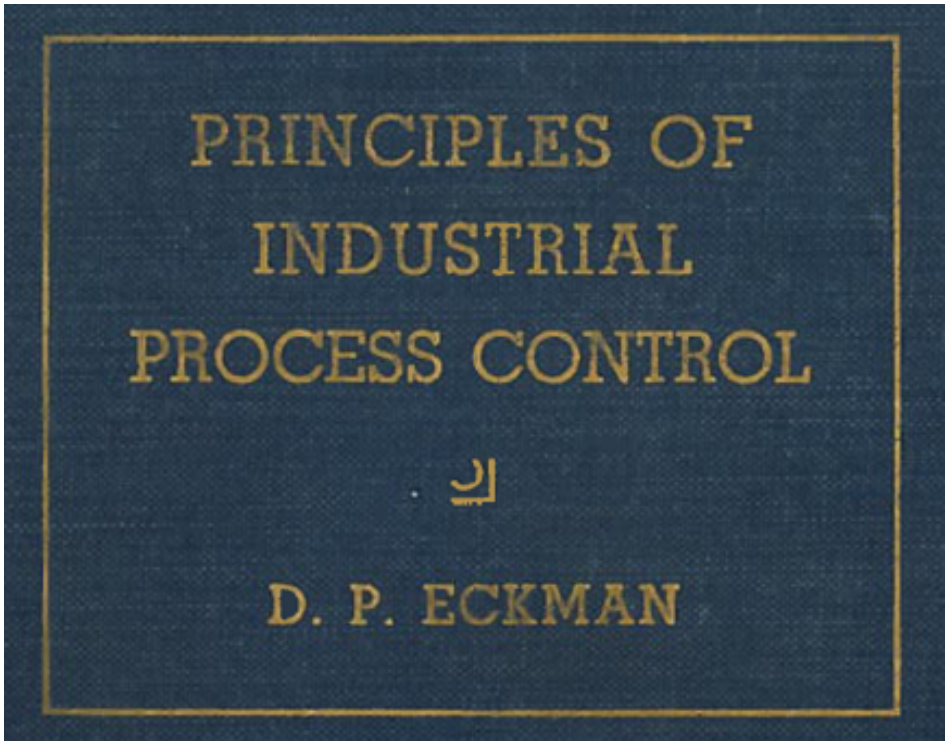

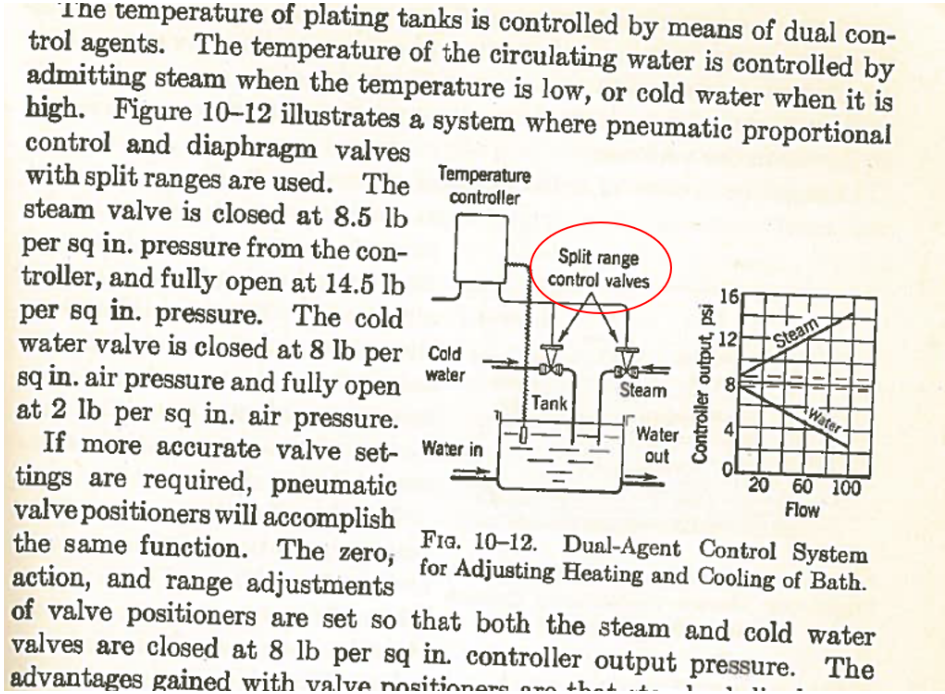

The temperature of plating tanks is controlled by means of dual control agents. The temperature of the circulating water is controlled by admitting steam when the temperature is low, or cold water when it is high. Figure 10–12 illustrates a system where pneumatic proportional control and diaphragm valves with split ranges are used. The steam valve is closed at 8.5 lb per sq in. pressure from the controller, and fully open at 14.5 lb per sq in. pressure. The cold water valve is closed at 8 lb per sq in. air pressure and fully open at 2 lb per sq in. air pressure.

If more accurate valve settings are required, pneumatic valve positioners will accomplish the same function. The zero, action, and range adjustments of valve positioners are set so that both the steam and cold water valves are closed at 8 lb per sq in. controller output pressure. The advantages gained with valve positioners are that

FIG. 10–12. Dual-Agent Control System for Adjusting Heating and Cooling of Bath.

2. Split range control. Textbook examples

Bequette, B.W. (2002). Process Control: Modeling, Design, and Simulation. Prentice-Hall.

Figure 12-4. Batch reactor temperature control. The jacket temperature controller has a split-range output, where the cold glycol valve is open during "cooling mode" and the hot glycol valve is oper during "heating mode."

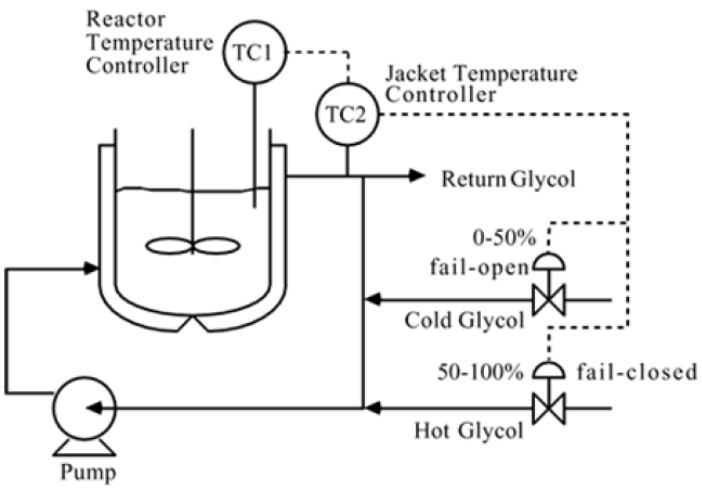

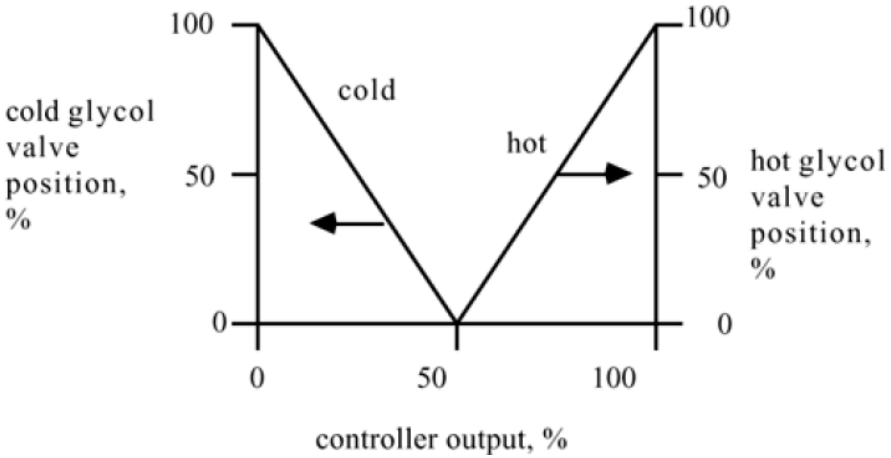

2. Split range control (SRC)

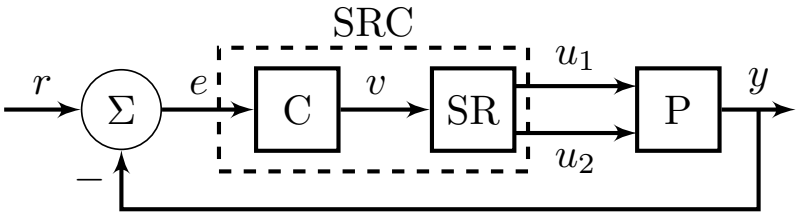

2. Split range control (SRC)

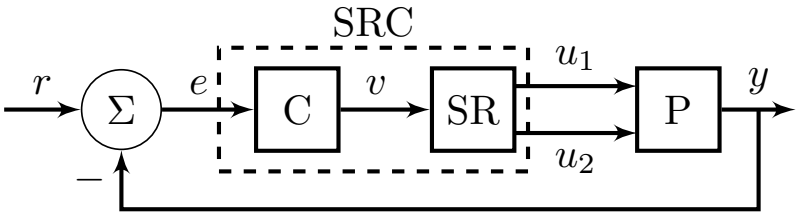

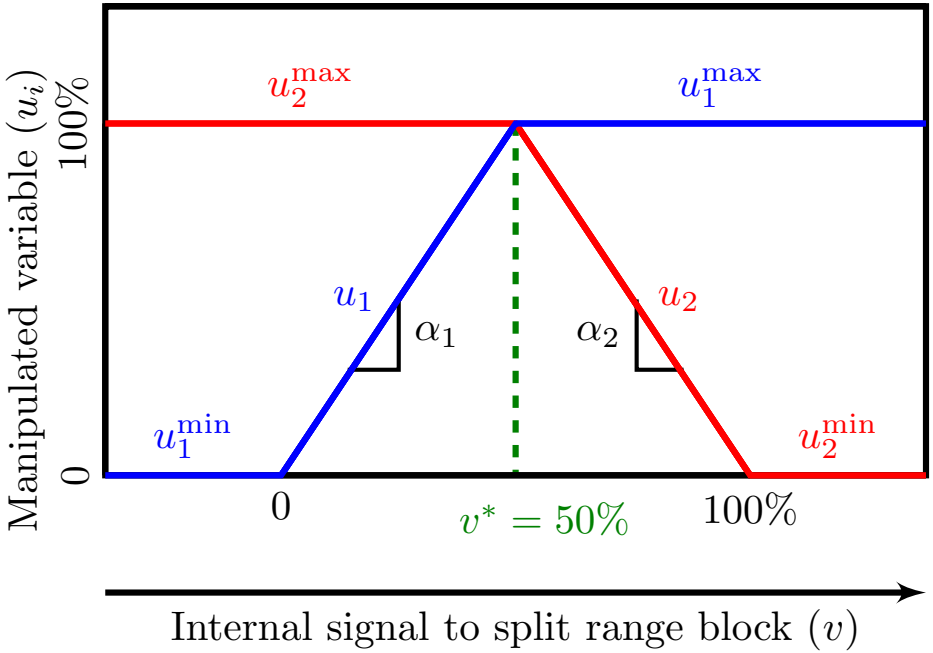

v internal signal to the split range block (limited physical meaning)

v^* split value (degree of freedom)

u_i controller output (physical meaning)

α_i gain from v to u_i (slope)

2. Split range control (SRC)

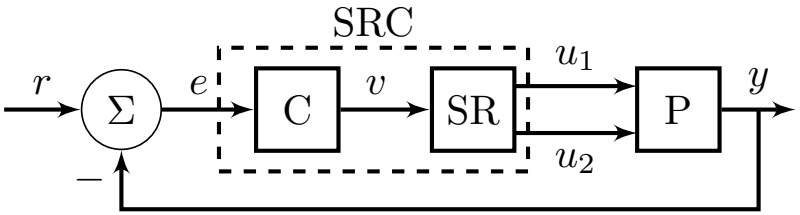

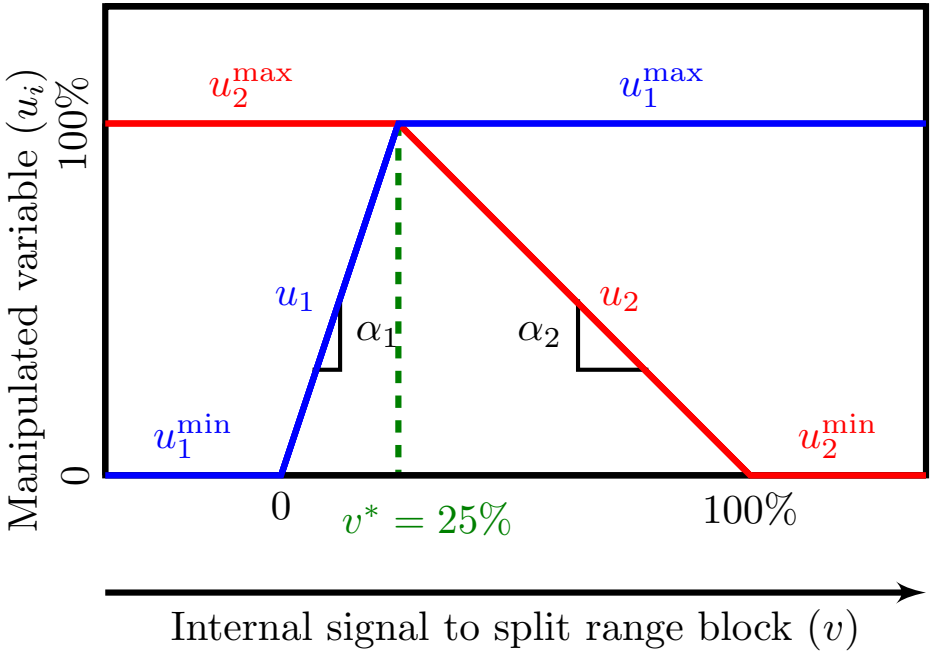

v internal signal to the split range block (limited physical meaning)

v^* split value (degree of freedom)

u_i controller output (physical meaning)

α_i gain from v to u_i (slope)

2. Split range control

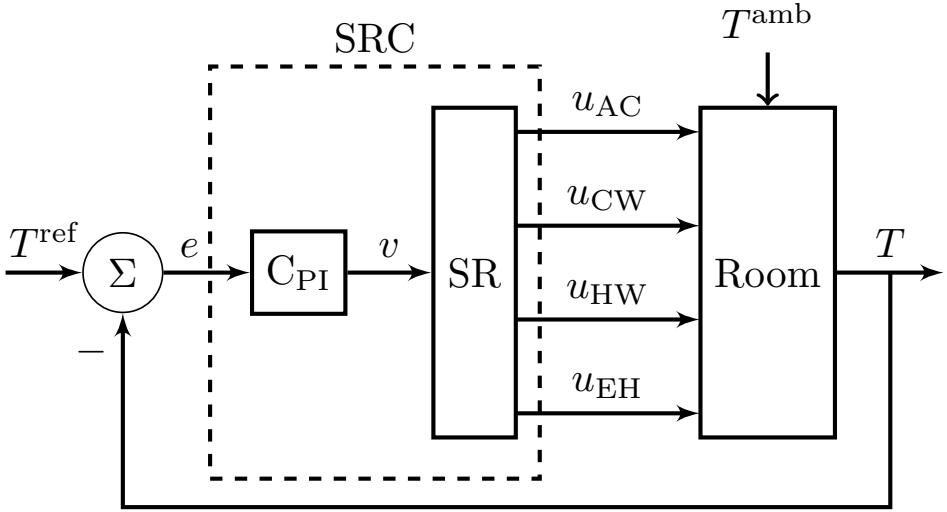

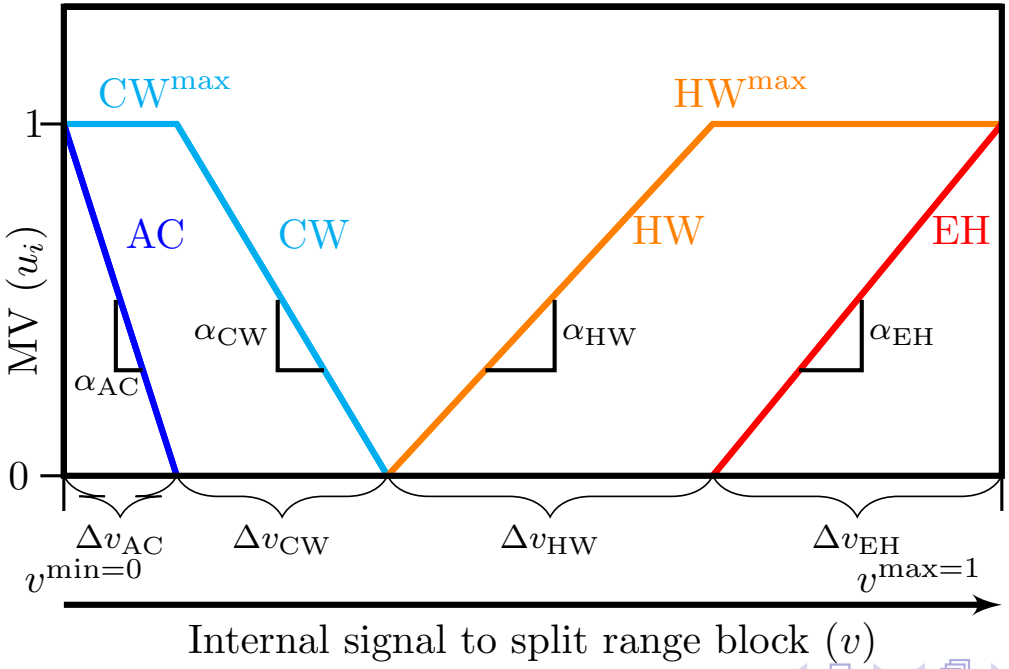

3. Selection of slopes

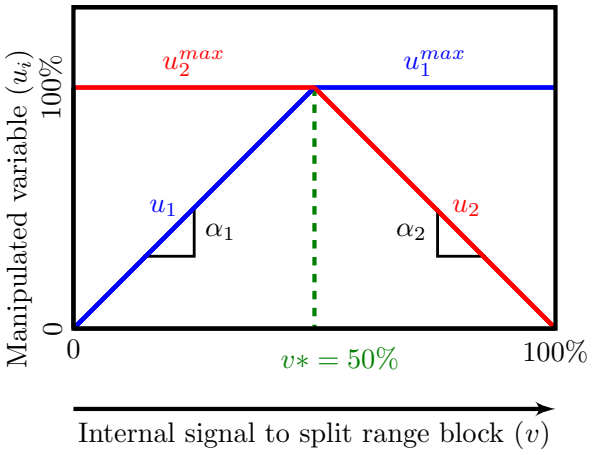

$$u_i = u_{i,0} + \alpha_i \; v \quad \forall i \in \{1, \ldots, N\}$$

3. Selection of slopes

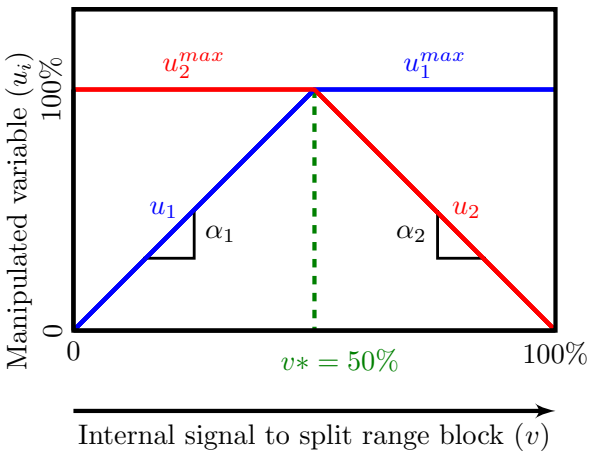

$$u_i = u_{i,0} + \alpha_i \; v \quad \forall i \in \{1, \ldots, N\}$$

Liptak, Shinskey (1985): *control valve sequencing loops must be designed that will keep the loop gain constant while switching valves.*

Our goal, get the desired loop gain at the crossover frequency ($\omega_c = \frac{1}{\tau_c}$)
Loop gain $= |gc|$
Desired loop gain : Obtained using SIMC PI-tunings for each MV

3. Selection of slopes

$$C(s) = K_C\left(1 + \frac{1}{\tau_I s}\right) \Longrightarrow \omega_c = \frac{1}{\tau_C} \Longrightarrow C(j\omega_c) = K_C\left(1 - j\frac{\tau_c}{\tau_I}\right)$$

$$K_I = \frac{K_C}{\tau_I}$$

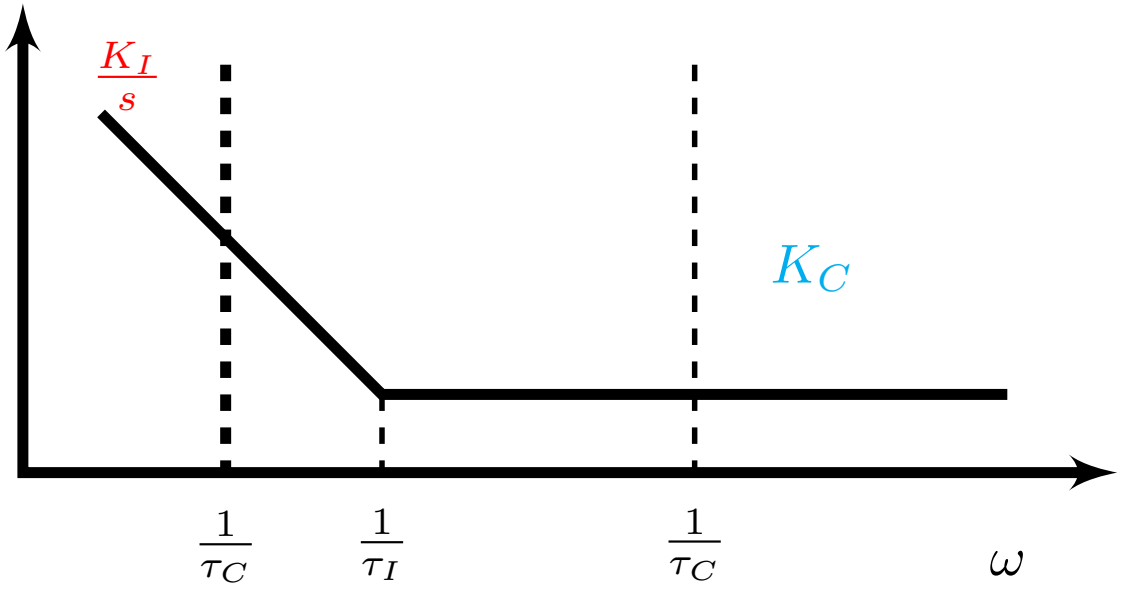

3. Selection of slopes

$$C(s) = K_C\left(1 + \frac{1}{\tau_I s}\right) \Longrightarrow \omega_c = \frac{1}{\tau_C} \Longrightarrow C(j\omega_c) = K_C\left(1 - j\frac{\tau_c}{\tau_I}\right)$$

$$K_I = \frac{K_C}{\tau_I}$$

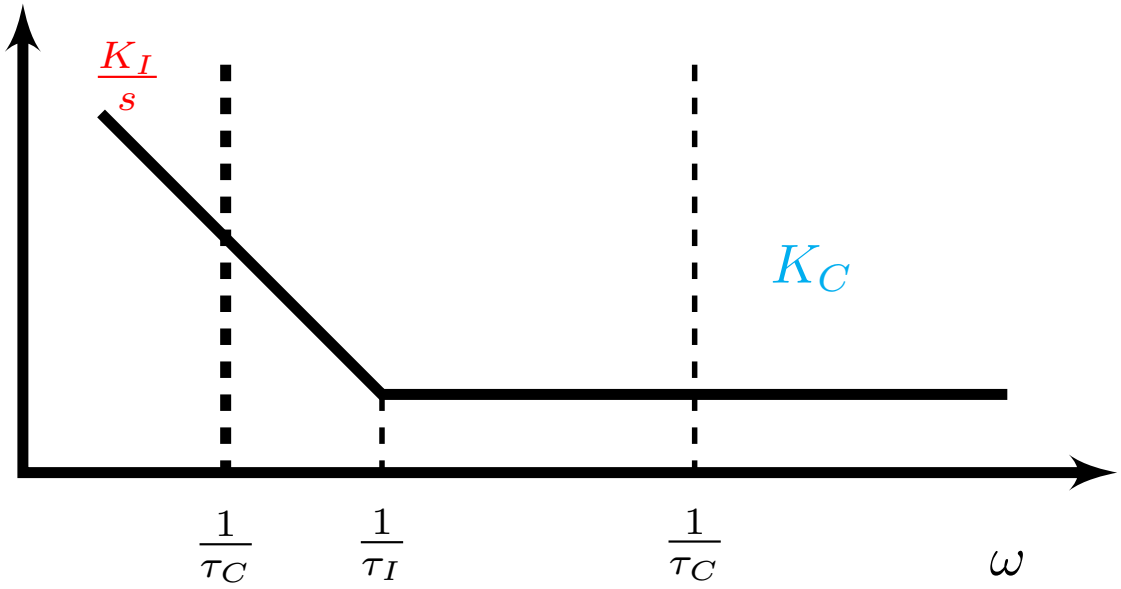

For fast process ($\tau \ll \theta$)

$$K_{I,i} = \alpha_i K_I$$

For slow process ($\tau \gg \theta$)

$$K_{C,i} = \alpha_i K_C$$

4. Proposed systematic procedure for split range controller design

Step 1 Define the range for the internal signal $v = [v_i^{\min} \;\; v_i^{\max}]$

4. Proposed systematic procedure for split range controller design

Step 1 Define the range for the internal signal $v = [v_i^{\min} \;\; v_i^{\max}]$

Step 2 Define the range for each MV $u = [u_i^{\min} \;\; u_i^{\max}]$

4. Proposed systematic procedure for split range controller design

Step 1 Define the range for the internal signal $v = [v_i^{\min} \;\; v_i^{\max}]$

Step 2 Define the range for each MV $u = [u_i^{\min} \;\; u_i^{\max}]$

Step 3 Tune controllers for each individual MV_i

4. Proposed systematic procedure for split range controller design

Step 1 Define the range for the internal signal $v = [v_i^{\min} \ v_i^{\max}]$

Step 2 Define the range for each MV $u = [u_i^{\min} \ u_i^{\max}]$

Step 3 Tune controllers for each individual MV_i

$$K_{C,i} = \frac{\tau_i}{K_{p,i}(\tau_{C,i} + \theta_i)}$$

$$\tau_{I,i} = \min(\tau_i, 4(\tau_{C,i} + \theta))$$

Step 4 For PI control, choose the integral time (τ_I)

4. Proposed systematic procedure for split range controller design

Step 1 Define the range for the internal signal $v = [v_i^{\min} \ v_i^{\max}]$

Step 2 Define the range for each MV $u = [u_i^{\min} \ u_i^{\max}]$

Step 3 Tune controllers for each individual MV_i

$$K_{C,i} = \frac{\tau_i}{K_{p,i}(\tau_{C,i} + \theta_i)}$$

$$\tau_{I,i} = \min(\tau_i, 4(\tau_{C,i} + \theta))$$

Step 4 For PI control, choose the integral time (τ_I)

a) Select τ_I of the most used MV or average $\tau_{I,i}$

4. Proposed systematic procedure for split range controller design

Step 1 Define the range for the internal signal $v = [v_i^{\min} \ v_i^{\max}]$

Step 2 Define the range for each MV $u = [u_i^{\min} \ u_i^{\max}]$

Step 3 Tune controllers for each individual MV_i

$$K_{C,i} = \frac{\tau_i}{K_{p,i}(\tau_{C,i} + \theta_i)}$$

$$\tau_{I,i} = \min(\tau_i, 4(\tau_{C,i} + \theta))$$

Step 4 For PI control, choose the integral time (τ_I)

a) Select τ_I of the most used MV or average $\tau_{I,i}$

b)

For fast process ($\tau \ll \theta$)

Select small $\tau_I = \min(\tau_{I,i})$

4. Proposed systematic procedure for split range controller design

Step 1 Define the range for the internal signal $v = [v_i^{\min} \;\; v_i^{\max}]$

Step 2 Define the range for each MV $u = [u_i^{\min} \;\; u_i^{\max}]$

Step 3 Tune controllers for each individual MV_i

$$K_{C,i} = \frac{\tau_i}{K_{p,i}(\tau_{C,i} + \theta_i)}$$

$$\tau_{I,i} = \min(\tau_i, 4(\tau_{C,i} + \theta))$$

Step 4 For PI control, choose the integral time (τ_I)

a) Select τ_I of the most used MV or average $\tau_{I,i}$

b)

For fast process ($\tau \ll \theta$)
Select small $\tau_I = \min(\tau_{I,i})$

For slow process ($\tau \gg \theta$)
Select large $\tau_I = \max(\tau_{I,i})$

4.Proposed systematic procedure for split range controller design

Step 5 Order the use of MVs $\Longrightarrow$ split range block:

4.Proposed systematic procedure for split range controller design

Step 5 Order the use of MVs $\Longrightarrow$ split range block:

Step 5.1 Define the desired operating point for each MV_i (open or closed)

4.Proposed systematic procedure for split range controller design

Step 5 Order the use of MVs $\Longrightarrow$ split range block:

Step 5.1 Define the desired operating point for each MV_i (open or closed)

Step 5.2 Group MVs:

a) moving away from desired operating point $\Rightarrow$ CV *increase*

b) moving away from desired operating point $\Rightarrow$ CV *decreases*

4.Proposed systematic procedure for split range controller design

Step 5 Order the use of MVs $\Longrightarrow$ split range block:

Step 5.1 Define the desired operating point for each MV_i (open or closed)

Step 5.2 Group MVs:

a) moving away from desired operating point $\Rightarrow$ CV *increase*

b) moving away from desired operating point $\Rightarrow$ CV *decreases*

Step 5.3 Consider economics

4.Proposed systematic procedure for split range controller design

Step 6 Find the slopes α_i and the commoun controler gain K_C by combining the following equations:

$$v^{\max} - v^{\min} = \sum_{i=1}^{N} \frac{u_i^{\max} - u_i^{\min}}{|\alpha_i|}$$

For fast process ($\tau \ll \theta$)

$$K_{I,i} = \alpha_i K_I$$

For slow process ($\tau \gg \theta$)

$$K_{C,i} = \alpha_i K_C$$

5. Case study: room temperature control

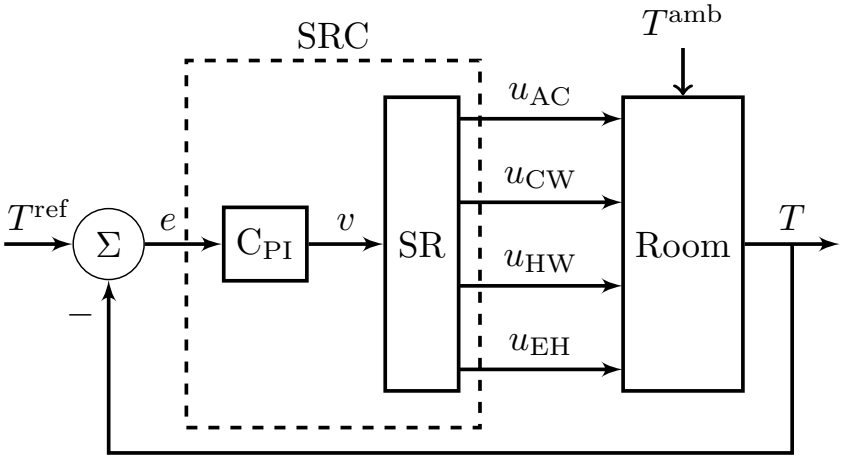

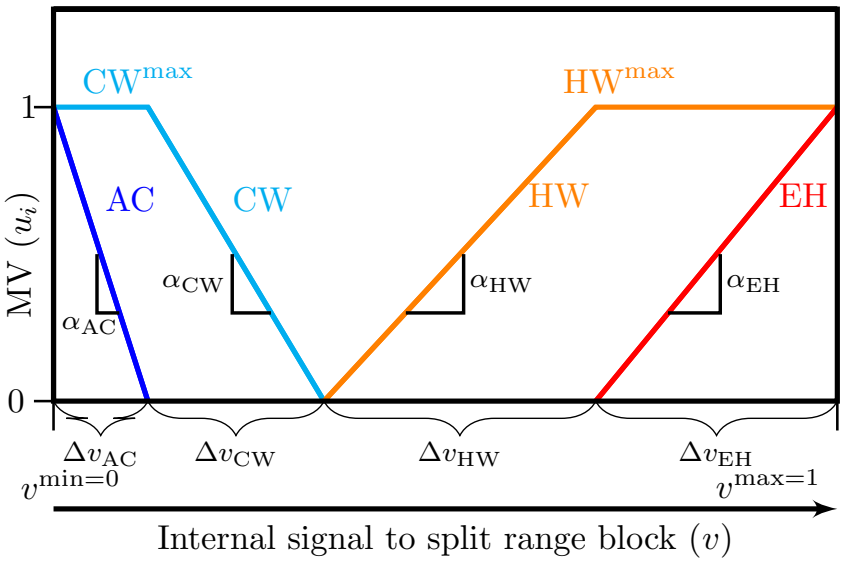

5. Case study: room temperature control

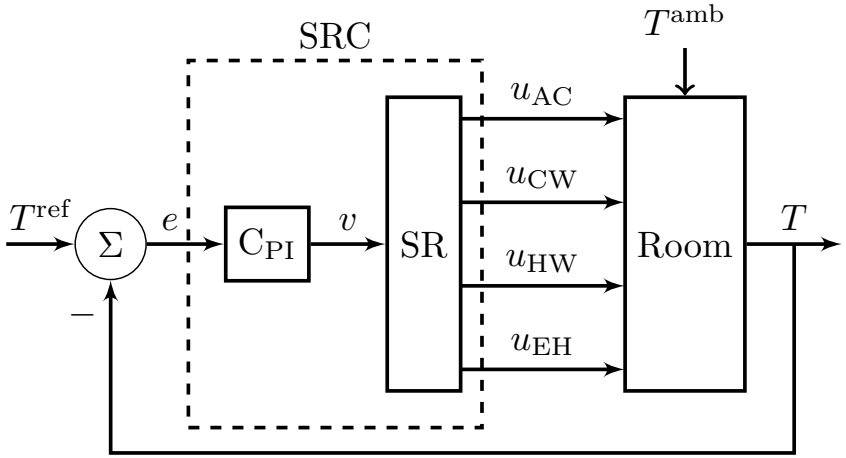

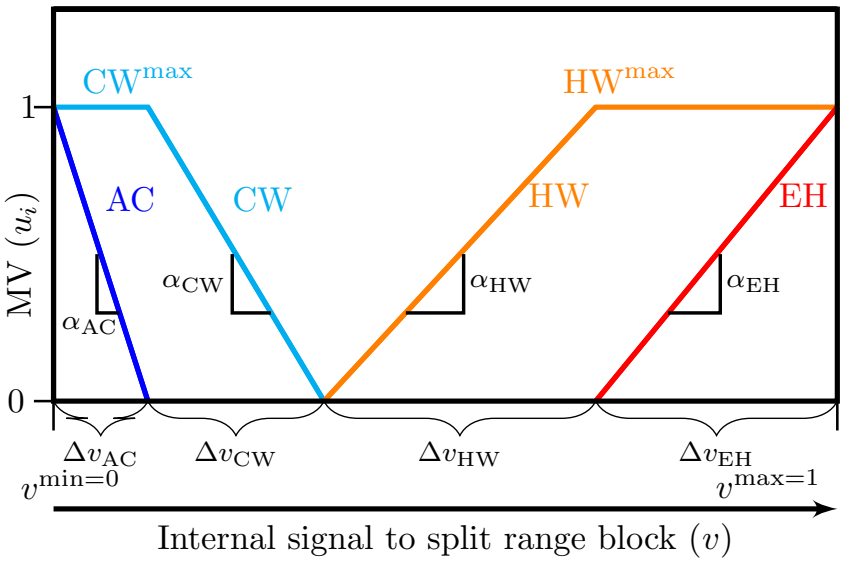

CV room temperature (T)

5. Case study: room temperature control

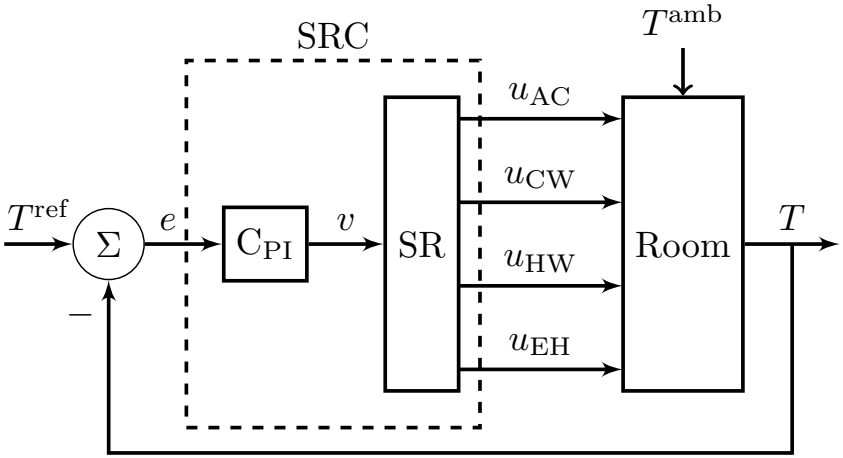

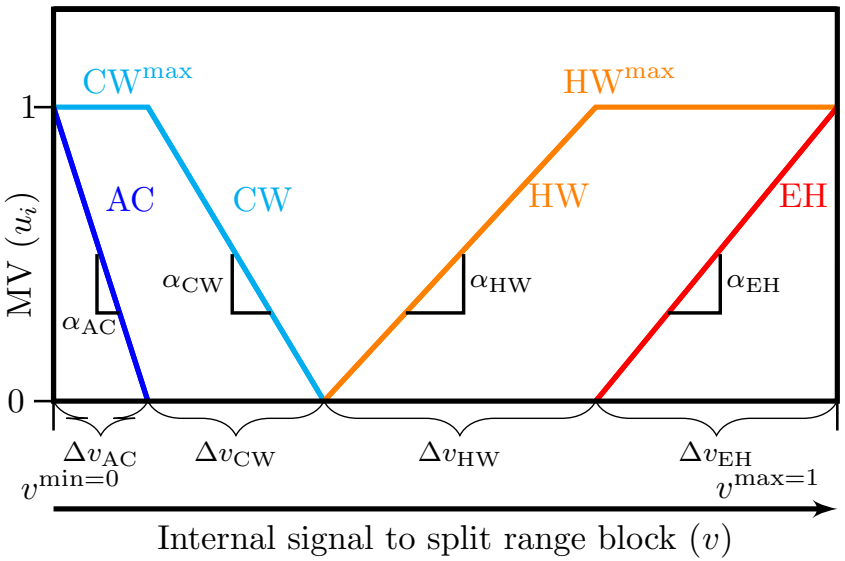

CV room temperature (T)

4 MVs degrees of freedom:

- MV1 air conditioning (AC)
- MV2 cooling water (CW)
- MV3 hot water (HW)
- MV4 electric heating (EH)

5. Case study: room temperature control

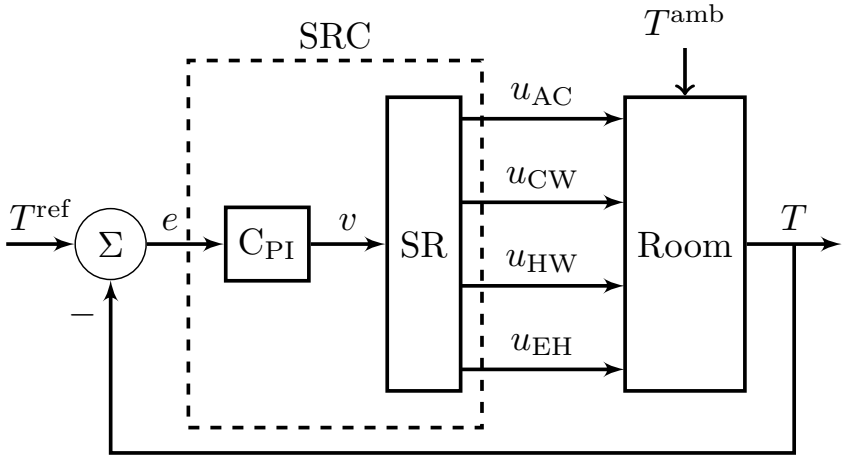

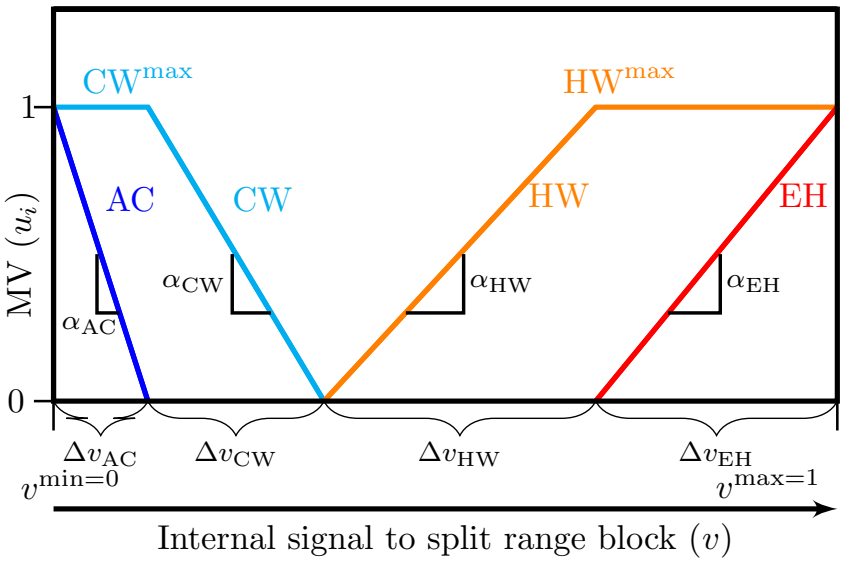

CV room temperature (T)

4 MVs degrees of freedom:

- MV1 air conditioning (AC)
- MV2 cooling water (CW)
- MV3 hot water (HW)
- MV4 electric heating (EH)

DV outdoor temperature (T^{amb})

5 Case study: room temperature control

Procedure

Step 1 Define the range for the internal signal

$$v = [0, 1]$$

5 Case study: room temperature control

Procedure

Step 1 Define the range for the internal signal

$$v = [0, 1]$$

Step 2 Find range for every MV (min and max values)

$$u = [0, 1]$$

5 Case study: room temperature control

Procedure

Step 1 Define the range for the internal signal

$$v = [0, 1]$$

Step 2 Find range for every MV (min and max values)

$$u = [0, 1]$$

Step 3 Tune for each MV

u_i	$\tau_{c,i}[min]$	$K_{C,i}$	$\tau_{I,i}[min]$
u_{AC}	2	-0.4000	8
u_{CW}	4	-0.2143	15
u_{HW}	3	0.1389	10
u_{EH}	3	0.1563	5

Step 4 Choose common integral time

$$\tau_I = 9.5\,\text{min}$$

5. Case study: room temperature control

Step 5 Order the use of MVs

5. Case study: room temperature control

Step 5 Order the use of MVs

Step 5.1 Desired operating point: $u = 0 \Longrightarrow T^{\text{amb}} = T$

Step 5.2 Group MVs:

a) heating (HW and EH)

5. Case study: room temperature control

Step 5 Order the use of MVs

Step 5.1 Desired operating point: $u = 0 \Longrightarrow T^{\text{amb}} = T$

Step 5.2 Group MVs:

a) heating (HW and EH)

b) cooling (AC and CW)

Step 5.3 Consider economics

5. Case study: room temperature control

Step 5 Order the use of MVs

Step 5.1 Desired operating point: $u = 0 \Longrightarrow T^{\text{amb}} = T$

Step 5.2 Group MVs:

a) heating (HW and EH)

b) cooling (AC and CW)

Step 5.3 Consider economics

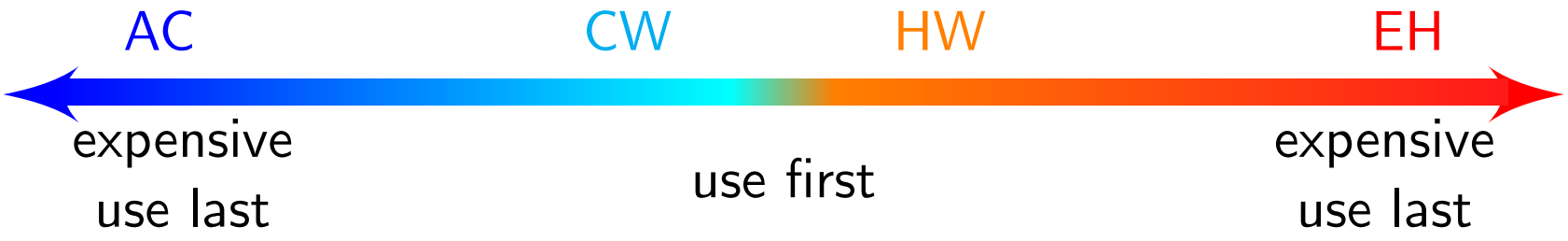

5. Case study: room temperature control

Step 6 Find the slopes α_i and the common controller gain K_C

$K_C = 0,0482$

	AC	CW	HW	EH
α_i	-8.3067	-4.4500	2.8843	3.2448

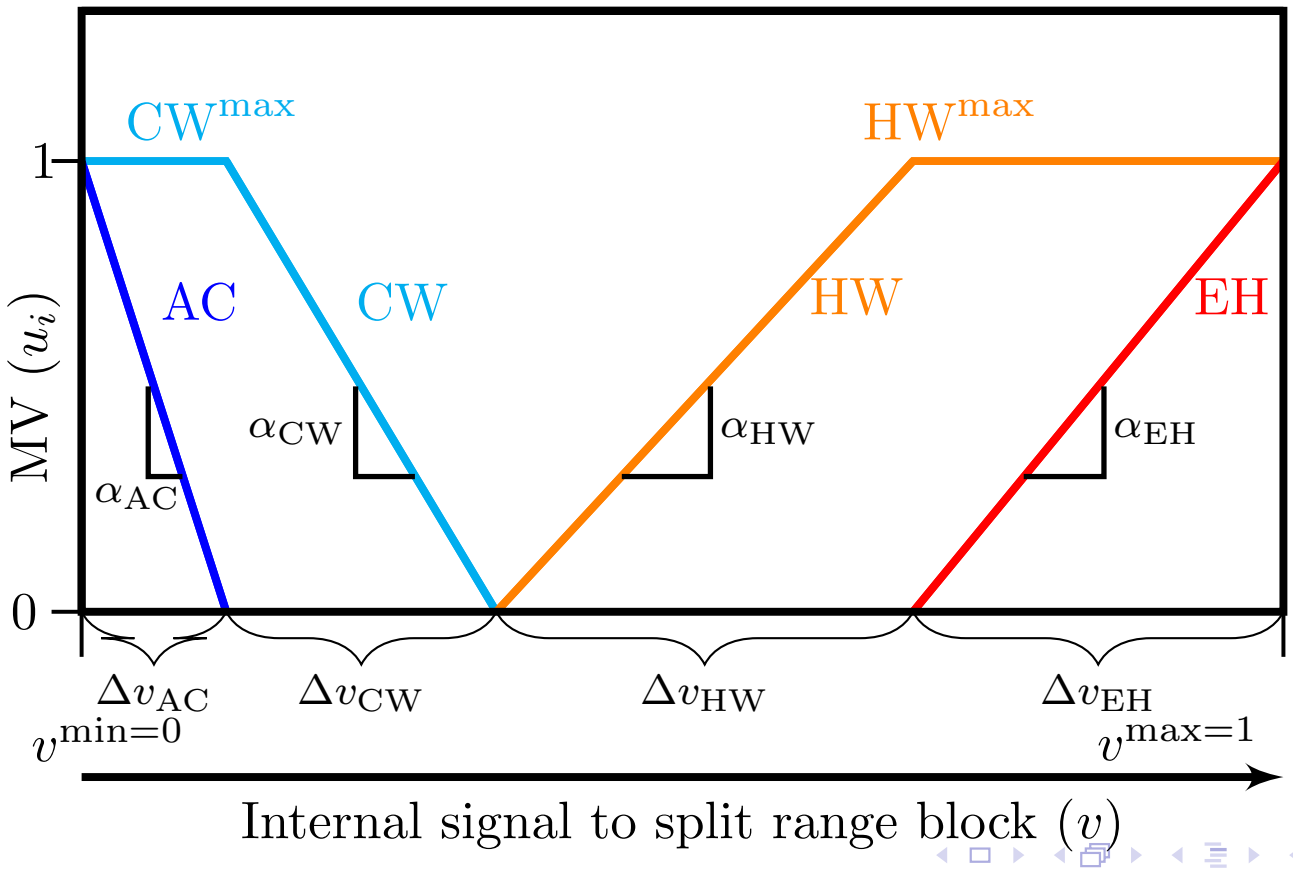

5. Case study: room temperature control.Changes in T^{amb}

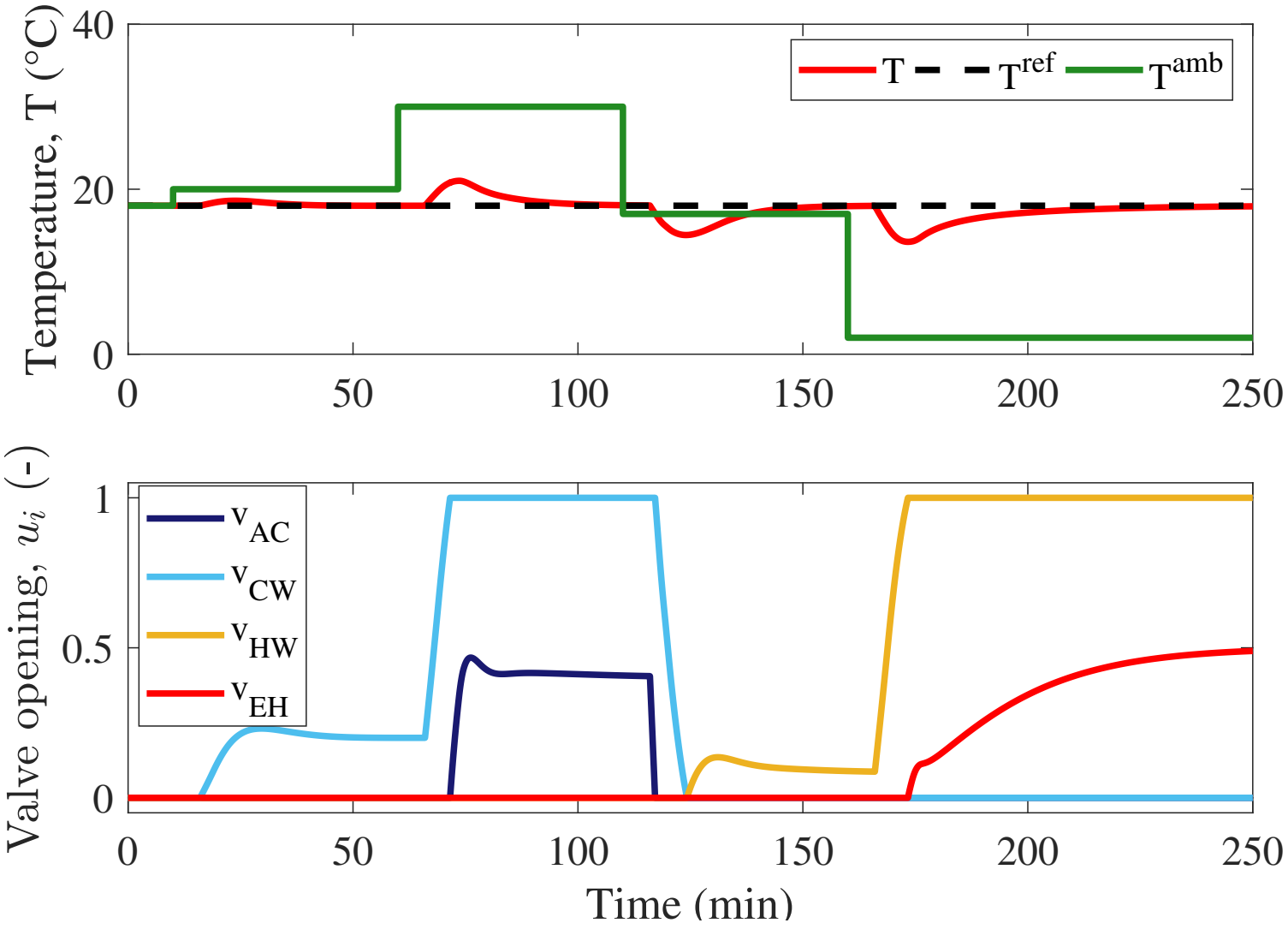

5. Case study: room temperature control.Changes in T^{ref}

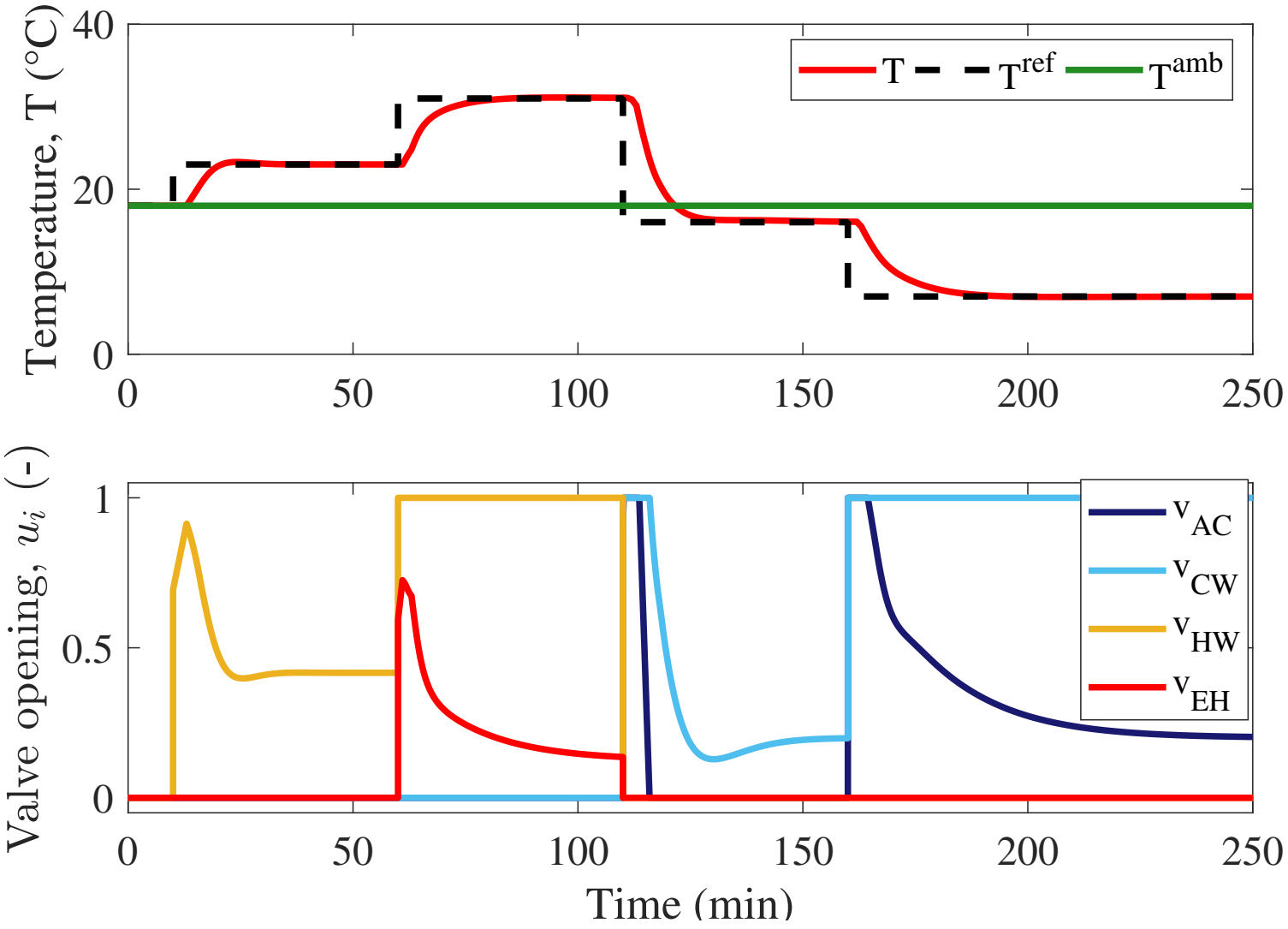

6. Conclusions

Split range control

- *one* CV and *any number of* MVs
- extend the steady-state operability range
- handles operation for changing of active constraints

Split range control systematic design

- need to consider the different MVs dynamics
- decide the bandwidth to control the process
- consider economics to order the use of MVs

6. Conclusions

Split range control

- *one* CV and *any number of* MVs
- extend the steady-state operability range
- handles operation for changing of active constraints

Split range control systematic design

- need to consider the different MVs dynamics
- decide the bandwidth to control the process
- consider economics to order the use of MVs

This work is partly funded by HighEFF - Centre for an Energy Effcient and Competitive Industry for the Future. The authors gratefully acknowledge the financial support from the Research Council of Norway and user partners of HighEFF, an 8 year Research Centre under the FME-scheme (Centre for Environment-friendly Energy Research, 257632).