2009 American Control Conference
Hyatt Regency Riverfront, St. Louis, MO, USA
June 10-12, 2009

Model Predictive Control Allocation - Design and Experimental Results on a Thermal Management System

Chris Vermillion, Jing Sun, and Ken Butts

Abstract— **In this paper, we consider the challenge of controlling an overactuated engine thermal management system where two actuators, with different dynamic authorities and saturation limits, are used to obtain tight temperature regulation. We propose a modular control strategy that combines model predictive control allocation (MPCA) with the concepts of model reference control to design an inner loop controller that closely matches a dynamic specification for the inner loop input-output performance while addressing actuator dynamics and saturation constraints. We present the design and implementation strategy and illustrate the effectiveness of the proposed solution through real-time simulation and experimental results.**

I. INTRODUCTION AND PROBLEM FORMULATION

Many applications involve overactuated systems, in which the number of control inputs exceeds the number of outputs that are being controlled to a setpoint. However, it is often the case that other performance considerations, such as transient performance and system efficiency, motivate, justify, and sometimes even mandate overactuation. Hence, leveraging overactuation has been an important consideration in control development.

In this paper, we will consider an overactuated engine thermal management system. The system, shown in Figs. 1-2, is used in engine testing in order to provide tight control of oil temperature at the engine outlet (a similar system to that of Fig. 1 exists for engine coolant; in this paper, we restrict our study to the oil system). The system consists of a heater, heat exchanger, and mixing valve, which are all housed in a compact cabinet that is connected via flexible piping to the engine block. Flow is generated through the engine oil pump, which delivers a flow rate that is proportional to engine speed (hence, flow rate cannot be adjusted freely over the course of an experiment). While the system is designed to control a single temperature (engine outlet temperature), its two actuators (the mixing valve and heater) both serve important purposes. The heater is needed to provide auxiliary heating at low speeds and loads, but acts as a slow source of actuation compared to the mixing valve, which can deliver a temperature change to the engine inlet very quickly. Both actuators possess hard saturation limits, and actuator saturation constraints are often active during operation. Given these characteristics, it is desirable to pursue a control strategy that coordinates the two control inputs in order to optimize performance while considering the dynamic authorities and saturation limits of the actuators.

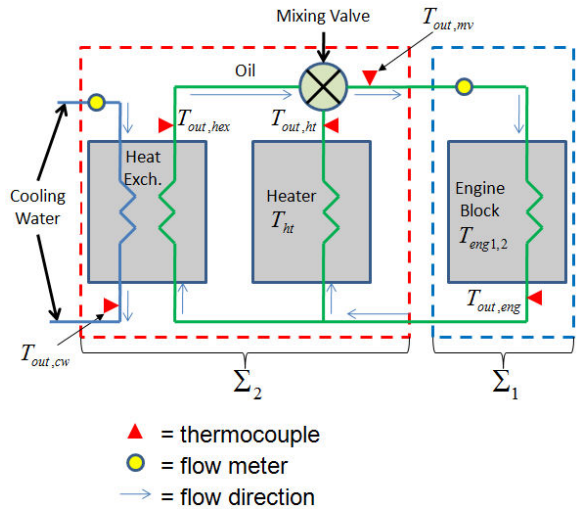

Fig. 1. Thermal management system diagram

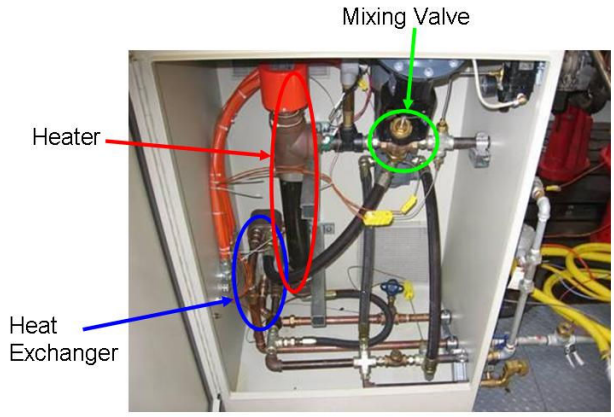

Fig. 2. Heater, heat exchanger, and mixing valve, which are housed in a unit separate from the engine

One key feature that is common to most overactuated systems, including the thermal management system studied here, is the presence of a signal that characterizes the overall effect of many actuators, which acts as a "virtual control" to the plant dynamics. For a MISO (multi-input, single output) system, the following representation can be used to

This work was supported by Toyota Engineering and Manufacturing in North America.

C. Vermillion and J. Sun are with the Electrical Engineering and Computer Science Department and Naval Architecture and Marine Engineering Department (respectively), University of Michigan, Ann Arbor, MI 48109, cvermill@umich.edu, jingsun@umich.edu

K. Butts is with Toyota Technical Center, Ann Arbor, MI 48105, ken.butts@tema.toyota.com

decompose the system into two subsystems after introducing the virtual control input:

$$\begin{aligned} x_1(k+1) &= f_1(x_1(k), v(k)) \\ y(k) &= h(x_1(k)) \\ x_2(k+1) &= f_2(x_1^{'}(k), x_2(k), u(k)) \\ v(k) &= g(x_2(k)), \end{aligned} \tag{1}$$

where $u \in \mathbb{R}^q$, $y \in \mathbb{R}$, and $v \in \mathbb{R}$ represent the control inputs, the performance output, and the *virtual control input*, respectively. $x_1 \in \mathbb{R}^{n_1}$ represents the plant states, which are driven by the virtual control input, v, whereas $x_2 \in \mathbb{R}^{n_2}$ represents the actuator states, which are driven by the real control inputs, u. $x_1^{'} \in \mathbb{R}^{n_1^{'}}$, with $n_1^{'} \leq n_1$, represents the subset of plant states that affect the actuator dynamics. The real control inputs, u, affect the plant states only through the virtual control input, v. In the thermal management application, we take the virtual control input (v) as the mixing valve outlet temperature and the performance output (y) as the engine outlet temperature.

Introduction of the virtual control input enables control designers to pursue a modular control strategy, as depicted in Fig. 3 (where the objective is to have y track a setpoint, r), which divides one large control design tasks into two less complex designs. Here, an outer loop controller determines a desired virtual control input, v_{des}, and an inner loop *control allocation* determines the real control inputs, u, that will be applied to the actuators in order to achieve close tracking of v_{des}.

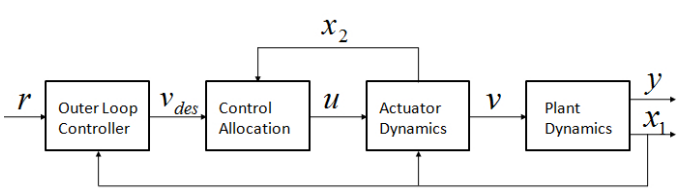

Fig. 3. Block diagram of the overall system under a modular control strategy

For the thermal management system, given that we are able to identify a virtual control input, along with the fact that the actuator subsystem possesses significant dynamics (as exhibited in [1]), we consider a modular control strategy using *dynamic control allocation* (as opposed to earlier static control allocation problems, such as [2]-[6]), as addressed in [7] -[11]. [8]-[11] employ a particularly attractive dynamic control allocation strategy, known as model predictive control allocation (MPCA). MPCA optimizes control inputs over a receding horizon in order to track the desired virtual control input closely while simultaneously considering actuator saturation constraints and actuator dynamics.

Various methods have been proposed throughout the literature that attempt to seamlessly integrate the outer and inner loops, including performing an inner loop "target state" calculation [9]-[10], [7] and employing a multi-rate control strategy [12] where the inner loop is updated at a faster rate than the outer loop. These methods are unified in their attempt to obtain tracking of v_{des}. Practicality of such an approach is contingent on sufficient time scale separation between the inner and outer loop dynamics, which often defeats the purpose of dynamic control allocation in the first place. In this work, we propose an alternative integration approach, which relies on an inner loop *reference model* that captures the desired inner loop input-output performance. An appropriately designed reference model describes inner loop input-output behavior that is achievable in the absence of saturation constraints, but may not be achievable when these constraints are active. The use of MPCA allows us to explicitly incorporate these constraints into its optimization in order to track the output of the reference model closely when constraints are active. Simulation results on the thermal management system will show the specific benefit of introducing the reference model for this system.

The paper is organized as follows. In Section II, we provide a detailed description of the modular design framework and the proposed MPCA structure. In Section III, we apply the design process to the thermal management system and present real-time simulation and experimental results.

II. THE REFERENCE MODEL APPROACH FOR MODEL PREDICTIVE CONTROL ALLOCATION

This section describes the reference model based approach for modular control with MPCA, including the presentation of the design framework and the details of MPCA.

A. Modular System Representation with an Inner Loop Reference Model

We first present the reference model based approach, where the inner loop reference model serves as the integration mechanism for the inner and outer loop control designs. Specifically, the reference model represents a design target for the inner loop control and a design assumption for the outer loop control. With the reference model based approach, the control design is carried out as follows:

1) Define a reference model that represents a desirable and realistic performance target for the inner closed loop.
2) Design the outer loop controller with the assumption that the inner loop behavior matches the behavior specified by the reference model.
3) For the inner loop control design, instead of focusing on driving v to v_{des}, design the inner closed loop to minimize the error between v and the output of the reference model (with input v_{des}), which will be referred to as v_{des}^f.

For the control design using the reference model based design framework, we consider the following non-minimum representation of the closed loop system, which is depicted in Fig. 4:

$$\Sigma_1 := \begin{cases} x_1^c(k+1) = f_1(x_1^c(k), v_{des}^f(k), \tilde{v}(k)) \\ v_{des}(k) = c_1(x_1^c(k), r(k)) \\ x_1^{'}(k) = d(x_1(k)) \\ x_f(k+1) = f_3(x_f(k), v_{des}(k)) \\ v_{des}^f(k) = g_f(x_f(k)) \end{cases} \tag{2}$$

$$\Sigma_2 := \begin{cases} x_2^c(k+1) = f_2(x_1^{'}(k), x_2^c(k), u(k)) \\ u(k) = c_2(x_1^{'}(k), x_2^c(k), v_{des}(k)) \\ v(k) = g(x_2(k)) \\ \tilde{v}(k) = v(k) - v_{des}^f(k) \\ x_f(k+1) = f_3(x_f(k), v_{des}(k)) \\ v_{des}^f(k) = g_f(x_f(k)) \end{cases} \quad (3)$$

where Σ_1 and Σ_2 denote the outer loop and inner loop systems with their corresponding controllers, $c_1(x_1^c(k), r(k))$ and $c_2(x_1^{'}(k), x_2^c(k), v_{des}(k))$, respectively. The states x_f are those of the inner loop *reference model*, an identical copy of which is embedded in each subsystem (Σ_1 and Σ_2). This reflects the design principle that, even if the inner and outer loop designs are carried out in parallel, knowledge of the reference model is common to both designers. In (2) and (3), the states, x_1^c and x_2^c are those of the *closed* loop system, thereby also containing controller states.

Given this design process, it is important to characterize what constitutes a "desirable and realistic" reference model. While the specific choice of reference model will depend on the application at hand (and we shall revisit the issue of selecting the reference model when we consider specifically the thermal management system), the reference model should at a minimum have a relative degree that is greater than or equal to the relative degree from u to v, where the relative degree is defined as follows [13]:

Definition 2.1: Σ_2 has (strict) relative degree ρ from u to v if the following hold:

1) $\forall i < \rho, \forall x(k) \in \mathbb{R}^n, \frac{\partial v(k+i)}{\partial u(k)} = 0_{1\times q}$
2) $\forall x(k) \in \mathbb{R}^n, \forall u(k) \in \mathbb{R}^q, \frac{\partial v(k+\rho)}{\partial u(k)} \neq 0_{1\times q}$.

It should be noted that for an overactuated system (like the thermal management system), $\frac{\partial v(k+i)}{\partial u(k)}$ is a vector, and only one element of that vector needs to be nonzero for the vector to be nonzero (which, in turn, implies that the relative degree of the reference model needs only to correspond to the *lowest* relative degree among all of the actuators). Without satisfying the aforementioned relative degree requirement, it becomes impossible for the inner loop behavior to match that which is specified by the reference model under a causal controller.

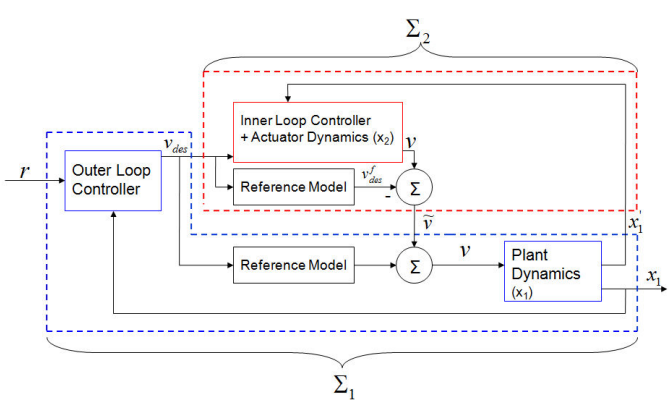

Fig. 4. Full Diagram of the system (1) recast for the reference model based design framework. The figure also reflects the distribution of design tasks (separated by dashed lines) between the inner and outer loop designs.

B. MPCA and Predictor Structure

The purpose of the inner loop control allocation is to generate closed loop behavior for Σ_2 that closely matches the inner loop reference model in the presence of saturation constraints and different dynamic actuator authorities. In order to do this, the inner loop controller is formulated as a standard model predictive control problem, as described in detail in [14]. We consider an optimization problem in which the following cost function is minimized over a receding horizon:

$$\begin{aligned} J(x_2(k), \mathbf{u}(k)) &= \sum_{i=k}^{k+N-1} l(\hat{x}_2(i|k), \hat{v}_{des}^f(i|k), u(i|k)), \\ \mathbf{u}(k) &= [\ u(k|k) \quad \ldots \quad u(k+N-1|k)\ ]^T \end{aligned}$$

subject to the constraints:

$$u(i|k) \in U = \{u : u_{min,j} \leq u_j \leq u_{max,j}, 1 \leq j \leq q\},$$

where:

$$\begin{aligned} l(\hat{x}_2(i|k), \hat{v}_{des}^f(i|k), u(i|k)) &= (\hat{v}(i|k) - \hat{v}_{des}^f(i|k))^2 \\ &\quad + P(\hat{x}_2(i|k), u(i|k)), \end{aligned}$$

where N is the length of the prediction horizon. The first control input is implemented, and the optimization is repeated at step $k+1$, when the new state measurements are obtained. Thus, the MPCA control law is:

$$u(k) = u^o(k|k), \quad (4)$$

where:

$$\begin{aligned} \mathbf{u}^o(k) &\triangleq \arg\min J(x_2(k), \mathbf{u}(k)) \quad (5) \\ &= [\ u^o(k|k) \quad \ldots \quad u^o(k+N-1|k)\ ]^T. \end{aligned}$$

The notation $\hat{v}$ (where v could be replaced with other variables) denotes a prediction, rather than the actual value, and the notation $(i|k)$ denotes the value at step i, where the prediction, or optimization in the case of $u(i|k)$, is being made at step k.

The first term in the incremental cost penalizes deviation from the inner loop reference model, whereas the second can be used to shape the response of the closed-loop system. The optimization requires a prediction of $\hat{v}_{des}^f(i|k), i = 0 \ldots N-1$, which is accomplished through an outer loop predictor, specified by:

$$\begin{aligned} \hat{x}_1(i+1|k) &= f_1(\hat{x}_1(i|k), \hat{v}_{des}^f(i|k), \hat{\tilde{v}}(i|k)), \\ \hat{v}_{des}(i|k) &= c_1(\hat{x}_1(i|k), \hat{r}(i|k)), \\ \hat{x}_1^{'}(i|k) &= d(\hat{x}_1(i|k)), \quad (6) \\ \hat{x}_f(i+1|k) &= f_3(\hat{x}_f(i|k), \hat{v}_{des}(i|k)), \\ \hat{v}_{des}^f(i|k) &= g_f(\hat{x}_f(i|k)). \end{aligned}$$

Note that MPCA by its nature automatically derives a prediction of the states over the receding horizon, i.e., $\hat{v}(i|k), i = 0 \ldots N$, so the inner loop predictor is already embedded in the MPCA. The incorporation of an outer loop predictor results in a modified system diagram, given by Fig. 5, which preserves the structure of Fig. 4 but incorporates prediction of v^f_{des} and $x_1^{'}$ over the receding horizon. The design of this predictor is within the design scope of the outer loop (hence, it lies within the dashed lines belonging to Σ_1), because it requires knowledge of the plant and outer loop controller dynamics.

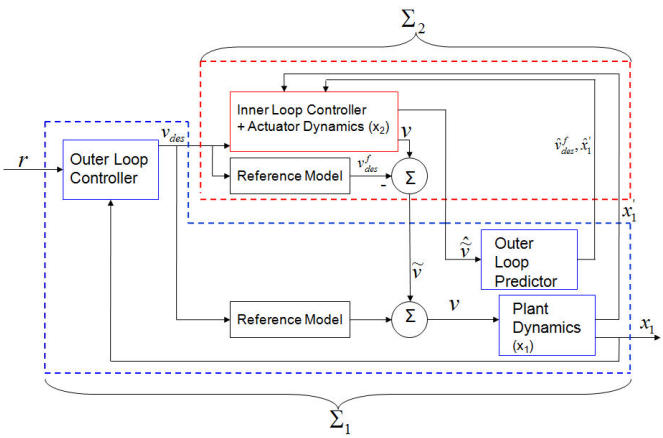

Fig. 5. Full diagram of the system (1) recast for the reference model based design framework

III. THERMAL MANAGEMENT APPLICATION

We now turn to the thermal management system that was introduced briefly in Section I. A detailed model of the thermal management system is given in [1]. Here, the two inputs, a mixing valve position and heater command (power, in kW), are represented by θ and $\dot{Q}_{ht}$, respectively.

Referring to the terminology and nomenclature introduced in [1], when we cast the thermal management system in the form specified by (1), the plant states (x_1) will include the engine outlet temperature, $T_{out,eng}$, and the engine block temperatures, $T_{eng1,2}$. The actuator states (x_2) will include the mixing valve outlet temperature (also the engine inlet temperature), $T_{out,mv}$, the heat exchanger outlet temperature, $T_{out,hex}$, the heater outlet temperature, $T_{out,ht}$, and the cooling water temperature at the outlet of the heat exchanger, $T_{out,cw}$. The virtual control input is the mixing valve outlet temperature, $T_{out,mv}$.

In addition to the system dynamics described in [1], the temperature dynamics of the mixing valve, which were neglected in [1], are included in this work and described by:

$$\dot{T}_{out,mv} = -\frac{1}{\tau_t}(T_{out,mv} + \theta T_{out,ht} + (1-\theta)T_{out,hex}). \quad (7)$$

These dynamics capture the fact that the valve outlet temperature does not change immediately upon actuation of the mixing valve.

A. Control Design

The controller design is divided into three components, namely the design of the inner loop reference model, the design of the outer loop controller, and the design of the MPCA optimization.

1) Inner Loop Reference Model Design: In this subsection, we consider the first step of the 3-step design procedure outlined at the beginning of Section II, namely the construction of the inner loop reference model. In the thermal management system, for constant coolant and oil flow rates (W_c and W_o), the plant subsystem is in fact linear, making basic linear design tools an effective method of performing both the reference model design and the outer loop controller design.

To design the reference model, we first observe that the actuator dynamics, with augmented temperature dynamics, have relative degree 1, suggesting an inner loop reference model with relative degree 1. The time constant corresponding to the temperature dynamics of the mixing valve, namely τ_t, is 8 seconds, and a reference model time constant of 8 seconds represents one viable option, which can be achieved through feedback of $T_{out,ht}$ and $T_{out,hex}$, both of which are measured. However, we also have the opportunity to speed up the inner closed loop dynamics (which can be accomplished by also using $T_{out,mv}$ in the inner loop control, which is also measured). Based on our experience with what is achievable in the thermal management system, we have chosen to pursue an inner loop reference model with a time constant $\tau_r = 4$ seconds, given by:

$$\begin{aligned} F(s) &= \frac{1}{\tau_r s + 1} = \frac{1}{4s+1}, \\ F(z) &= \frac{.22}{z - .78}, \end{aligned} \quad (8)$$

where the implementation sampling time is 1 second. Once an outer loop controller has been determined, which is our next step, we will be able to see the effect of choosing this reference model on the nominal system performance. In general, these two steps (reference model design and outer loop control design) may be performed iteratively until a desirable solution has been reached.

2) Outer Loop Control Design: For the outer loop control design, we replace the closed inner loop dynamics with our choice of $F(z)$ and proceed with the control design using linear system design and analysis tools. Simplicity is an important factor in choosing the outer loop controller, and linear design tools (Root loci and Bode plots), as well as simulations where the inner loop is replaced with $F(s)$ (i.e., where the reference model is matched exactly, which is shown in Fig. 7), indicate that a PI controller, given by:

$$\begin{aligned} C(s) &= \frac{2s + 0.05}{s}, \\ C(z) &= \frac{2z - 1.95}{z - 1}, \end{aligned} \quad (9)$$

(where the implementation sampling time is again 1 second) yields desirable results.

3) MPCA Optimization: For this application, the inner loop sampling time is taken as 1 second (same as the outer loop), with the cost function specified by (4) with $P(x_2, u) = 0$. The horizon length for the MPCA optimization is chosen to be 30 seconds (30 steps), which is reflective of the time constants associated with the inner loop reference model as well as the heater and heat exchanger.

The MPCA optimization used in this paper relies on the computation of the *sensitivity function*, as in [15], which captures the sensitivity of the cost function to the control inputs. This method has been shown in [15] to be more efficient than DP or SQP methods (for a particular large-scale ship application) and is capable of handling saturation constraints. The sensitivity function provides a search direction along which a one-dimensional optimization is performed to determine the minimum value of the cost function. The process is carried out iteratively until the optimal cost converges, based on a prescribed convergence criterion, or a maximum number of iterations has been reached. Readers are referred to [15] for the details of implementation.

B. Real Time Simulation Results

Prior to implementing the proposed controller on the thermal management system, we performed simulations on the University of Michigan Real Time and Adaptive Control Engineering (RACE) Lab's OpalRT^{TM} real time simulator. This allowed us to simultaneously simulate the response of the system and verify the computational feasibility of its real-time implementation prior to obtaining experimental results in the test cell.

In order to provide a benchmark control strategy against which to compare the MPCA strategy, we consider a closed-form controller, given by:

$$\begin{aligned} \theta(k) &= sat\Big(\frac{1}{T_{out,ht} - T_{out,hex}}\big((1 - \frac{\tau_t}{\tau_r})(T^{des}_{out,mv} \\ &\quad - T_{out,mv}) + T^{des}_{out,mv} - T_{out,hex}\big)\Big), \qquad (10) \\ \dot{Q}_{ht}(k) &= 2.25, \end{aligned}$$

which results in closed inner loop performance that *matches* the reference model exactly when saturation is not active. Here, the heater is held at a constant power (one that is desirable for the engine speed and load conditions), which has been employed in previous thermal management strategies due to the difficulty in effectively incorporating the heater into the controller [1].

Real-time simulation results are shown in Figs. 7-9 (along with experimental results), with the trajectories of the performance variable ($T_{out,eng}$), the control inputs (θ and $\dot{Q}_{ht}$), and the virtual control input ($T_{out,mv}$). These simulations are based on a test condition with an engine speed of 2000 rpm and load of 75 N-m. Results demonstrate that reference model based MPCA uses both actuators effectively in order to provide more accurate tracking than under the benchmark (closed form) controller. However, in the case when no reference model is used (where $F = 1$ and hence $v^f_{des} = v_{des}$), MPCA produces erratic control inputs in an effort to achieve an objective that is unrealistic for the system at hand. While the consequences of not incorporating a reference model into the inner loop design will likely vary by application, this particular case study shows that a properly designed reference model-based MPCA algorithm can alleviate these negative consequences without hindering any aspect of system performance.

C. Experimental Validation

In our experimental setup, depicted in Fig. 6, the controller and hardware interface are designed using MATLAB Real Time Workshop^{TM} and xPC Target^{TM}. The configuration relies on a host PC where all of the control design takes place, and a target PC, which executes compiled C code and transmits/receives signals through two rapid prototyping boards. One board, the Measurement Computing PCI-DAS-TC^{TM} board, handles all of the thermocouple measurements (with locations depicted in Fig. 1), whereas the other board, the Quanser Q4^{TM}, handles the analog inputs (flow rate measurements, with locations depicted in Fig. 1) and outputs (mixing valve and heater commands).

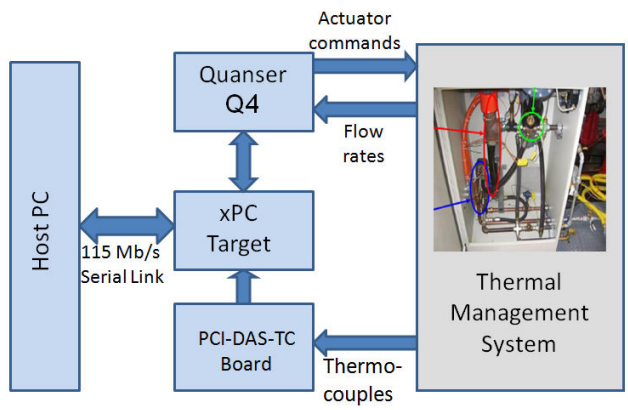

Fig. 6. Thermal management rapid prototyping configuration

Experimental results were acquired for identical test cases as those used in simulation (engine speed of 2000 rpm and load of 75 N-m) and are provided in Figs. 7-9. These experimental results show that MPCA does indeed outperform the benchmark, closed-form controller by making effective use of the heater, particularly in temperature increase responses where the mixing valve saturates. The slight offset between v and v^f_{des} throughout Fig. 8 is due to the fact that there is no integrator for the inner loop, and the inner loop model is not perfect. In this system, the integrator present in the outer loop controller is sufficient for steady-state tracking of the desired engine outlet temperature.

IV. Conclusions and Future Work

This paper proposes a reference model based version of model predictive control allocation (MPCA) that is applied on a thermal management system. We have shown the entire design process and demonstrated through real-time

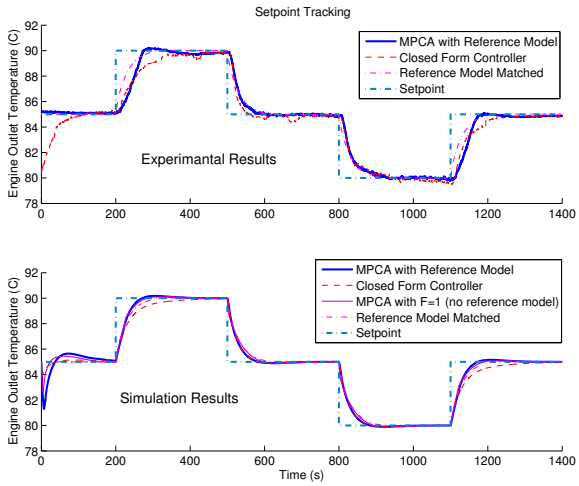

Fig. 7. Setpoint tracking response.

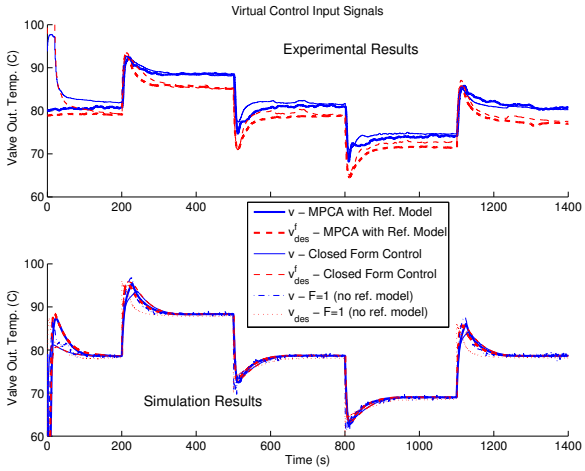

Fig. 8. Virtual control input response.

simulation and experimental results that MPCA does an effective job of blending the effects of two different actuators in order to improve control quality. Future work will involve the development of deeper theoretical insights with regard to the stability and guaranteed levels of performance with the reference model based approach.

V. Acknowledgement

The authors thank Adam Vickery of IAV Automotive and Brian Moore of A and D Technology for staying in the test cell after normal hours to help to run experimental validation tests.

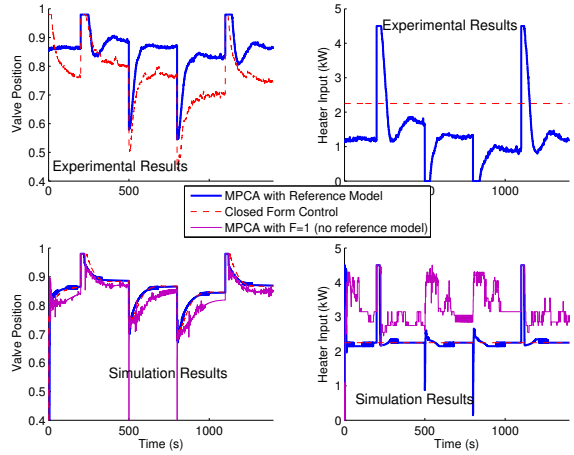

Fig. 9. Actuator responses.

References

[1] C. Vermillion, J. Sun, K. Butts, A. Hall, "Modeling and Analysis of a Thermal Management System for Engine Calibration," *Proceedings of the IEEE Conference on Control Applications*, 2006.

[2] T. Johansen, T. Fossen, S. Berge, "Constrained Nonlinear Control Allocation with Singularity Avoidance Using Sequential Quadratic Programming," *IEEE Transactions on Control Systems Technology*, Vol. 12, No. 1, 2004, pp. 211-216.

[3] O. J. Sordalen, "Optimal Thrust Allocation for Marine Vessels," *Control Engineering Practice*, Vol. 5, No. 9, 1997, pp. 1223-1231.

[4] O. Harkegard, "Resolving Actuator Redundancy - Control Allocation vs. Linear Quadratic Control," *Proceedings of the European Control Conference*, 2003.

[5] M. Bodson, "Evaluation of Optimization Methods for Control Allocation," *Journal of Guidance, Control, and Dynamics*, Vol. 25, No. 4, July-August 2002, pp. 703-711.

[6] W. Durham, "Attainable Moments for the Contstrained Control Allocation Problem," *Journal of Guidance, Control, and Dynamics*, Vol. 17, No. 6, 1994.

[7] J. Tjonnas, T. Johansen, "Optimizing Adaptive Control Allocation with Actuator Dynamics," *Proceedings of the IEEE Conference on Decision and Control*, 2007.

[8] Y. Luo, A. Serrani, S. Yurkovich, D. Doman, M. Oppenheimer, "Model Predictive Dynamic Control Allocation with Actuator Dynamics," *Proceedings of the American Control Conference*, 2004.

[9] Y. Luo, A. Serrani, S. Yurkovich, D. Doman, M. Oppenheimer, "Dynamic Control Allocation with Asymptotic Tracking of Time-Varying Control Input Commands," *Proceedings of the American Control Conference*, 2005.

[10] Y. Luo, A. Serrani, S. Yurkovich, M. Oppenheimer, D. Doman, "Model Predictive Dynamic Control Allocation Scheme for Reentry Vehicles," *Journal of Guidance, Control, and Dynamics*, Vol. 30, No. 1, 2007, pp. 100-113.

[11] C. Vermillion, J. Sun, K. Butts, "Model Predictive Control Allocation - Stability and Performance," *Proceedings of the IEEE Conference on Decision and Control*, 2007.

[12] R. Scattolini, P. Colaneri, "Hierarchical Model Predictive Control," *Proceedings of the IEEE Conference on Decision and Control*, 2007.

[13] D. Liberzon, A. Morse, E. Sontag, "Output-input Stability and Minimum-phase Nonlinear Systems," *IEEE Transactions on Automatic Control*, Vol. 47, No. 3, pp. 422-436, 2002.

[14] D. Mayne, J. Rawlings, C. Rao, P. Scokaert, "Constrained Model Predictive Control: Stability and Optimality," *Automatica*, Vol. 36, No. 6, pp. 789-814, 2000.

[15] G. Seenumani, J. Sun, H. Peng, "A Numerically Efficient Iterative Procedure for Hybrid Power System Optimization Using Sensitivity Functions," *Proceedings of the American Control Conference*, 2007.